SECTION DLK

DOOR & LOCK

CONTENTS

WITH INTELLIGENT KEY SYSTEM

BASIC INSPECTION 7

DIAGNOSIS AND REPAIR WORKFLOW 7
Work Flow 7

INSPECTION AND ADJUSTMENT 10

ADDITIONAL SERVICE WHEN REPLACING CONTROL UNIT 10
ADDITIONAL SERVICE WHEN REPLACING CONTROL UNIT : Description 10
ADDITIONAL SERVICE WHEN REPLACING CONTROL UNIT : Special Repair Requirement 10

FUNCTION DIAGNOSIS 11

POWER DOOR LOCK SYSTEM 11
System Diagram 11
System Description 11
Component Parts Location 12
Component Description 12

INTELLIGENT KEY SYSTEM 14

INTELLIGENT KEY SYSTEM 14
INTELLIGENT KEY SYSTEM : System Diagram....14
INTELLIGENT KEY SYSTEM : System Description 14
INTELLIGENT KEY SYSTEM : Component Parts Location 15
INTELLIGENT KEY SYSTEM : Component Description 16

DOOR LOCK FUNCTION 16
DOOR LOCK FUNCTION : System Diagram 17
DOOR LOCK FUNCTION : System Description 17
DOOR LOCK FUNCTION : Component Parts Location 19
DOOR LOCK FUNCTION : Component Description 20

TRUNK OPEN FUNCTION 20
TRUNK OPEN FUNCTION : System Diagram 21
TRUNK OPEN FUNCTION : System Description....21
TRUNK OPEN FUNCTION : Component Parts Location 23
TRUNK OPEN FUNCTION : Component Description 24

REMOTE KEYLESS ENTRY FUNCTION 24
REMOTE KEYLESS ENTRY FUNCTION : System Diagram 25
REMOTE KEYLESS ENTRY FUNCTION : System Description 25
REMOTE KEYLESS ENTRY FUNCTION : Component Parts Location 27
REMOTE KEYLESS ENTRY FUNCTION : Component Description 28

KEY REMINDER FUNCTION 28
KEY REMINDER FUNCTION : System Description 28
KEY REMINDER FUNCTION : Component Parts Location 30

WARNING FUNCTION 31
WARNING FUNCTION : System Description 31
WARNING FUNCTION : Component Parts Location 36

TRUNK OPEN FUNCTION 38
System Diagram 38
System Description 38
Component Parts Location 38
Component Description 39

FUEL FILLER LID OPENER 40
Component Parts Location 40

DIAGNOSIS SYSTEM (BCM) 41

COMMON ITEM 41

COMMON ITEM : CONSULT-III Function (BCM - COMMON ITEM) 41

DOOR LOCK 42
DOOR LOCK : CONSULT-III Function (BCM - DOOR LOCK) 42

INTELLIGENT KEY 43
INTELLIGENT KEY : CONSULT-III Function (BCM - INTELLIGENT KEY) 43

TRUNK 46
TRUNK : CONSULT-III Function (BCM - TRUNK)... 46

COMPONENT DIAGNOSIS 48

U1000 CAN COMM CIRCUIT 48

BCM 48
BCM : Description 48
BCM : DTC Logic 48
BCM : Diagnosis Procedure 48

U1010 CONTROL UNIT (CAN) 49

BCM 49
BCM : DTC Logic 49
BCM : Diagnosis Procedure 49
BCM : Special Repair Requirement 49

B2621 INSIDE KEY ANTENNA 1 50
Description 50
DTC Logic 50
Diagnosis Procedure 50

B2622 INSIDE KEY ANTENNA 2 52
Description 52
DTC Logic 52
Diagnosis Procedure 52

B2623 INSIDE KEY ANTENNA 3 54
Description 54
DTC Logic 54
Diagnosis Procedure 54

POWER SUPPLY AND GROUND CIRCUIT 56

BCM (BODY CONTROL MODULE) 56
BCM (BODY CONTROL MODULE) : Diagnosis Procedure 56

DOOR SWITCH 57
Description 57
Component Function Check 57
Diagnosis Procedure 57
Component Inspection 59

DOOR LOCK AND UNLOCK SWITCH 60
Description 60
Component Function Check 60
Diagnosis Procedure 60

DOOR LOCK ACTUATOR 61

DRIVER SIDE 61
DRIVER SIDE : Description 61
DRIVER SIDE : Component Function Check 61
DRIVER SIDE : Diagnosis Procedure 61

PASSENGER SIDE 61
PASSENGER SIDE : Description 62
PASSENGER SIDE : Component Function Check 62
PASSENGER SIDE : Diagnosis Procedure 62

REAR LH 62
REAR LH : Description 62
REAR LH : Component Function Check 63
REAR LH : Diagnosis Procedure 63

REAR RH 63
REAR RH : Description 63
REAR RH : Component Function Check 63
REAR RH : Diagnosis Procedure 64

TRUNK LID OPENER ACTUATOR 65
Description 65
Component Function Check 65
Diagnosis Procedure 65

REMOTE KEYLESS ENTRY RECEIVER 67
Description 67
Component Function Check 67
Diagnosis Procedure 67

TRUNK LID OPENER SWITCH 70
Description 70
Component Function Check 70
Diagnosis Procedure 70
Component Inspection 71

DOOR REQUEST SWITCH 72
Description 72
Component Function Check 72
Diagnosis Procedure 72
Component Inspection 73

TRUNK LID OPENER REQUEST SWITCH 74
Description 74
Component Function Check 74
Diagnosis Procedure 74
Component Inspection 75

TRUNK ROOM LAMP SWITCH 76
Description 76
Component Function Check 76
Diagnosis Procedure 76
Component Inspection 77

UNLOCK SENSOR 78
Description 78
Component Function Check 78
Diagnosis Procedure 78
Component Inspection 79

OUTSIDE KEY ANTENNA 80

Description 80
Component Function Check 80
Diagnosis Procedure 80

INTELLIGENT KEY WARNING BUZZER 82
Description 82
Component Function Check 82
Diagnosis Procedure 82
Component Inspection 83

INTELLIGENT KEY 84
Description 84
Component Function Check 84
Diagnosis Procedure 84
Component Inspection 84
Special Repair Requirement 85

KEY SLOT 86
Description 86
Component Function Check 86
Diagnosis Procedure 86
Component Inspection 87

KEY SLOT ILLUMINATION 88
Description 88
Component Function Check 88
Diagnosis Procedure 88
Component Inspection 89

HORN FUNCTION 91
Description 91
Component Function Check 91
Diagnosis Procedure 91

COMBINATION METER DISPLAY FUNCTION 93
Description 93
Component Function Check 93
Diagnosis Procedure 93

BUZZER (COMBINATION METER) 94
Description 94
Component Function Check 94
Diagnosis Procedure 94

KEY WARNING LAMP 95
Description 95
Component Function Check 95
Diagnosis Procedure 95

HAZARD FUNCTION 96
Description 96
Component Function Check 96
Diagnosis Procedure 96

POWER DOOR LOCK SYSTEM 97
Wiring Diagram - POWER DOOR LOCK SYSTEM - 97

INTELLIGENT KEY SYSTEM 104
Wiring Diagram - INTELLIGENT KEY SYSTEM -.. 104

TRUNK LID OPENER 116
Wiring Diagram - TRUNK LID OPENER - 116

FUEL FILLER LID OPENER 119
Wiring Diagram - FUEL LID OPENER - 119

ECU DIAGNOSIS 121

BCM (BODY CONTROL MODULE) 121
Reference Value 121
Wiring Diagram - BCM - 144
Fail-safe 150
DTC Inspection Priority Chart 152
DTC Index 153

SYMPTOM DIAGNOSIS 155

DOOR DOES NOT LOCK/UNLOCK WITH DOOR LOCK AND UNLOCK SWITCH 155

ALL DOOR 155
ALL DOOR : Diagnosis Procedure 155

DRIVER SIDE 155
DRIVER SIDE : Diagnosis Procedure 155

PASSENGER SIDE 155
PASSENGER SIDE : Diagnosis Procedure 156

REAR LH 156
REAR LH : Diagnosis Procedure 156

REAR RH 156
REAR RH : Diagnosis Procedure 156

VEHICLE SPEED SENSING AUTO LOCK OPERATION DOES NOT OPERATE 157
Diagnosis Procedure 157

DOOR DOES NOT LOCK/UNLOCK WITH INTELLIGENT KEY 158
Description 158
Diagnosis Procedure 158

HAZARD AND HORN REMINDER DOES NOT OPERATE 159
Description 159
Diagnosis Procedure 159

AUTO DOOR LOCK OPERATION DOES NOT OPERATE 160
Description 160
Diagnosis Procedure 160

DOOR DOES NOT LOCK/UNLOCK WITH DOOR REQUEST SWITCH 161

DRIVER SIDE 161
DRIVER SIDE : Description 161
DRIVER SIDE : Diagnosis Procedure 161

PASSENGER SIDE 161
PASSENGER SIDE : Description 161

PASSENGER SIDE : Diagnosis Procedure 162

TRUNK 162
TRUNK : Description 162
TRUNK : Diagnosis Procedure 163

TRUNK LID DOES NOT OPEN WITH TRUNK LID OPENER SWITCH 164
Description 164
Diagnosis Procedure 164

TRUNK LID DOES NOT OPEN WITH INTELLIGENT KEY 165
Description 165
Diagnosis Procedure 165

TRUNK LID DOES NOT OPEN WITH TRUNK LID OPENER REQUEST SWITCH 166
Description 166
Diagnosis Procedure 166

HAZARD AND BUZZER REMINDER DOES NOT OPERATE 167
Description 167
Diagnosis Procedure 167

KEY REMINDER FUNCTION DOES NOT OPERATE 168
Description 168
Diagnosis Procedure 168

KEY WARNING DOES NOT OPERATE 169
Description 169
Diagnosis Procedure 169

OFF POSITION WARNING DOES NOT OPERATE 170
Description 170
Diagnosis Procedure 170

P POSITION WARNING DOES NOT OPERATE 171
Description 171
Diagnosis Procedure 171

ACC WARNING DOES NOT OPERATE 173
Description 173
Diagnosis Procedure 173

TAKE AWAY WARNING DOES NOT OPERATE 174

DOOR IS OPEN 174
DOOR IS OPEN : Description 174
DOOR IS OPEN : Diagnosis Procedure 174

ANY DOOR OPEN TO ALL DOORS CLOSED 175
ANY DOOR OPEN TO ALL DOORS CLOSED : Description 175
ANY DOOR OPEN TO ALL DOORS CLOSED : Diagnosis Procedure 175

PUSH-BUTTON IGNITION SWITCH OPERATION. 175
PUSH-BUTTON IGNITION SWITCH OPERATION : Description 176
PUSH-BUTTON IGNITION SWITCH OPERATION : Diagnosis Procedure 176

INTELLIGENT KEY IS REMOVED FROM KEY SLOT 176
INTELLIGENT KEY IS REMOVED FROM KEY SLOT : Description 176
INTELLIGENT KEY IS REMOVED FROM KEY SLOT : Diagnosis Procedure 177

INTELLIGENT KEY LOW BATTERY WARNING DOES NOT OPERATE 178
Description 178
Diagnosis Procedure 178

DOOR LOCK OPERATION WARNING DOES NOT OPERATE WITH DOOR REQUEST SWITCH 179
Description 179
Diagnosis Procedure 179

KEY ID WARNING DOES NOT OPERATE 180
Description 180
Diagnosis Procedure 180

INTELLIGENT KEY LOW BATTERY WARNING DOES NOT OPERATE 181
Description 181
Diagnosis Procedure 181

SQUEAK AND RATTLE TROUBLE DIAGNOSES 182
Work Flow 182
Inspection Procedure 184
Diagnostic Worksheet 186

PRECAUTION 188

PRECAUTIONS 188
Precaution for Supplemental Restraint System (SRS) "AIR BAG" and "SEAT BELT PRE-TENSIONER" 188
Precaution for Procedure without Cowl Top Cover. 188
Precaution Necessary for Steering Wheel Rotation after Battery Disconnect 188
Work 189

PREPARATION 190

PREPARATION 190
Commercial Service Tools 190

ON-VEHICLE REPAIR 191

HOOD 191

HOOD ASSEMBLY 191
HOOD ASSEMBLY : Exploded View 191

HOOD ASSEMBLY : Removal and Installation 192
HOOD ASSEMBLY : Adjustment 193

HOOD HINGE 193
HOOD HINGE : Exploded View 194
HOOD HINGE : Removal and Installation 194

HOOD SUPPORT ROD 194
HOOD SUPPORT ROD : Exploded View 195
HOOD SUPPORT ROD : Removal and Installation 195

RADIATOR CORE SUPPORT 196
Exploded View 196
Removal and Installation 196

FRONT FENDER 199
Exploded View 199
Removal and Installation 199

FRONT DOOR 201

DOOR ASSEMBLY 201
DOOR ASSEMBLY : Exploded View 201
DOOR ASSEMBLY : Removal and Installation 202
DOOR ASSEMBLY : Adjustment 203

DOOR STRIKER 203
DOOR STRIKER : Exploded View 203
DOOR STRIKER : Removal and Installation 204

DOOR HINGE 204
DOOR HINGE : Exploded View 204
DOOR HINGE : Removal and Installation 204

DOOR CHECK LINK 205
DOOR CHECK LINK : Exploded View 205
DOOR CHECK LINK : Removal and Installation .. 205

REAR DOOR 207

DOOR ASSEMBLY 207
DOOR ASSEMBLY : Exploded View 207
DOOR ASSEMBLY : Removal and Installation 208
DOOR ASSEMBLY : Adjustment 209

DOOR STRIKER 209
DOOR STRIKER : Exploded View 209
DOOR STRIKER : Removal and Installation 210

DOOR HINGE 210
DOOR HINGE : Exploded View 210
DOOR HINGE : Removal and Installation 210

DOOR CHECK LINK 211
DOOR CHECK LINK : Exploded View 211
DOOR CHECK LINK : Removal and Installation .. 211

TRUNK LID 213

TRUNK LID ASSEMBLY 213
TRUNK LID ASSEMBLY : Exploded View 213
TRUNK LID ASSEMBLY : Removal and Installation 214
TRUNK LID ASSEMBLY : Adjustment 215

TRUNK LID STRIKER 215
TRUNK LID STRIKER : Exploded View 216
TRUNK LID STRIKER : Removal and Installation. 216

TRUNK LID HINGE 216
TRUNK LID HINGE : Exploded View 217
TRUNK LID HINGE : Removal and Installation 217

TRUNK LID STAY 217
TRUNK LID STAY : Exploded View 218
TRUNK LID STAY : Removal and Installation 218

TRUNK LID WEATHER-STRIP 219
TRUNK LID WEATHER-STRIP : Exploded View .. 219
TRUNK LID WEATHER-STRIP : Removal and Installation 219

HOOD LOCK 220
Exploded View 220
Removal and Installation 220
Inspection 221

FRONT DOOR LOCK 222

DOOR LOCK 222
DOOR LOCK : Exploded View 222
DOOR LOCK : Removal and Installation 222

INSIDE HANDLE 223
INSIDE HANDLE : Exploded View 223
INSIDE HANDLE : Removal and Installation 223

OUTSIDE HANDLE 223
OUTSIDE HANDLE : Exploded View 224
OUTSIDE HANDLE : Removal and Installation 224

REAR DOOR LOCK 227

DOOR LOCK 227
DOOR LOCK : Exploded View 227
DOOR LOCK : Removal and Installation 227

INSIDE HANDLE 227
INSIDE HANDLE : Exploded View 228
INSIDE HANDLE : Removal and Installation 228

OUTSIDE HANDLE 228
OUTSIDE HANDLE : Exploded View 229
OUTSIDE HANDLE : Removal and Installation 229

TRUNK LID LOCK 231
Exploded View 231
Removal and Installation 231

FUEL FILLER LID OPENER 232
Exploded View 232
Removal and Installation 232

DOOR SWITCH 234
Exploded View 234
Removal and Installation 234

INSIDE KEY ANTENNA 235

INSTRUMENT CENTER 235
INSTRUMENT CENTER : Exploded View 235
INSTRUMENT CENTER : Removal and Installation 235

CONSOLE 235
CONSOLE : Exploded View 236
CONSOLE : Removal and Installation 236

TRUNK ROOM 236
TRUNK ROOM : Exploded View 237
TRUNK ROOM : Removal and Installation 237

OUTSIDE KEY ANTENNA 238

DRIVER SIDE 238
DRIVER SIDE : Exploded View 238
DRIVER SIDE : Removal and Installation 238

PASSENGER SIDE 238
PASSENGER SIDE : Exploded View 238
PASSENGER SIDE : Removal and Installation ...238

REAR BUMPER 238
REAR BUMPER : Exploded View 238
REAR BUMPER : Removal and Installation 238

INTELLIGENT KEY WARNING BUZZER 240
Exploded View 240
Removal and Installation 240

KEY SLOT 241
Exploded View 241
Removal and Installation 241

TRUNK LID OPENER REQUEST SWITCH 242
Exploded View 242
Removal and Installation 242

TRUNK LID OPENER SWITCH 243
Exploded View 243
Removal and Installation 243

REMOTE KEYLESS ENTRY RECEIVER 244
Exploded View 244
Removal and Installation 244

INTELLIGENT KEY BATTERY 245
Removal and Installation 245

BASIC INSPECTION

DIAGNOSIS AND REPAIR WORKFLOW

Work Flow

INFOID:0000000003794729

OVERALL SEQUENCE

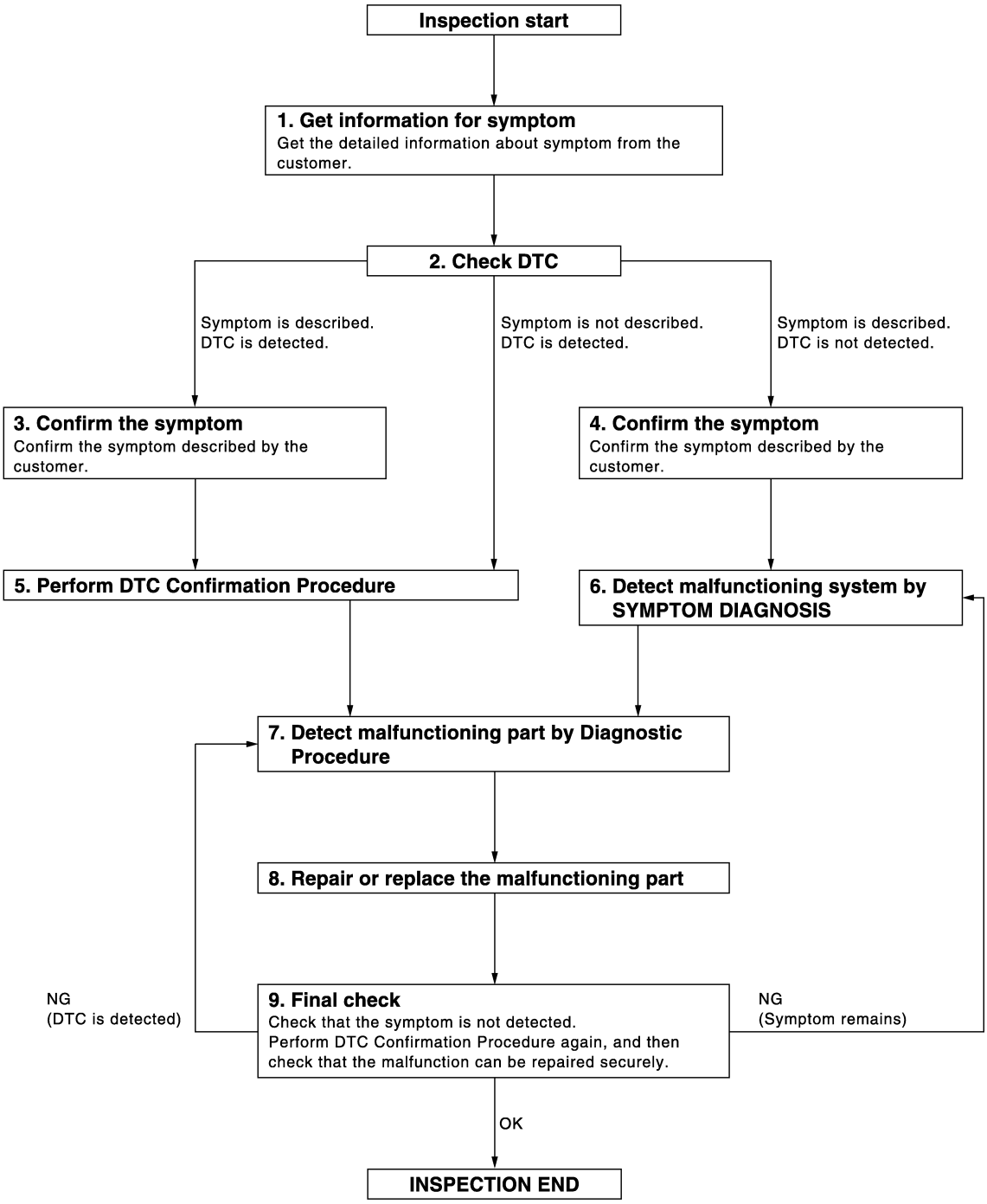

JMKIA2754GB

DETAILED FLOW

1. GET INFORMATION FOR SYMPTOM

Get the detailed information from the customer about the symptom (the condition and the environment when the incident/malfunction occurred).

>> GO TO 2.

2. CHECK DTC

1. Check DTC for BCM.
2. Perform the following procedure if DTC is displayed.
- Record DTC and freeze frame data (print them out with CONSULT-III).
- Erase DTC.
- Study the relationship between the cause detected by DTC and the symptom described by the customer.
3. Check related service bulletins for information.

Is any symptom described and any DTC detected?

Symptom is described, DTC is displayed>>GO TO 3.
Symptom is described, DTC is not displayed>>GO TO 4.
Symptom is not described, DTC is displayed>>GO TO 5.

3. CONFIRM THE SYMPTOM

Confirm the symptom described by the customer.
Connect CONSULT-III to the vehicle in “DATA MONITOR” mode and check real time diagnosis results.
Verify relation between the symptom and the condition when the symptom is detected.

>> GO TO 5.

4. CONFIRM THE SYMPTOM

Confirm the symptom described by the customer.
Connect CONSULT-III to the vehicle in “DATA MONITOR” mode and check real time diagnosis results.
Verify relation between the symptom and the condition when the symptom is detected.

>> GO TO 6.

5. PERFORM DTC CONFIRMATION PROCEDURE

Perform DTC Confirmation Procedure for the displayed DTC, and then check that DTC is detected again.
At this time, always connect CONSULT-III to the vehicle, and check diagnostic results in real time.
If two or more DTCs are detected, refer to DLK-152, "DTC Inspection Priority Chart" (BCM) determine trouble diagnosis order.

NOTE:
Perform Component Function Check if DTC Confirmation Procedure is not included in Service Manual. This simplified check procedure is an effective alternative though DTC cannot be detected during this check.
If the result of Component Function Check is NG, it is the same as the detection of DTC by DTC Confirmation Procedure.

Is DTC detected?

YES >> GO TO 7.
NO >> Refer to GI-35, "Intermittent Incident".

6. DETECT MALFUNCTIONING SYSTEM BY SYMPTOM DIAGNOSIS

Detect malfunctioning system according to SYMPTOM DIAGNOSIS based on the confirmed symptom in step 4, and determine the trouble diagnosis order based on possible causes and symptom.

>> GO TO 7.

7. DETECT MALFUNCTIONING PART BY DIAGNOSTIC PROCEDURE

Inspect according to Diagnostic Procedure of the system.

NOTE:
The Diagnostic Procedure described based on open circuit inspection. A short circuit inspection is also required for the circuit check in the Diagnostic Procedure.

Is malfunctioning part detected?

YES >> GO TO 8.
NO >> Check voltage of related BCM terminals using CONSULT-III.

8. REPAIR OR REPLACE THE MALFUNCTIONING PART

1. Repair or replace the malfunctioning part.
2. Reconnect parts or connectors disconnected during Diagnostic Procedure again after repair and replacement.
3. Check DTC. If DTC is displayed, erase it.

>> GO TO 9.

9. FINAL CHECK

When DTC was detected in step 2, perform DTC Confirmation Procedure or Component Function Check again, and then check that the malfunction has been repaired securely.
When symptom was described from the customer, refer to confirmed symptom in step 3 or 4, and check that the symptom is not detected.

Does the symptom reappear?

YES (DTC is detected)>>GO TO 7.
YES (Symptom remains)>>GO TO 6.
NO >> **INSPECTION END**

INSPECTION AND ADJUSTMENT

ADDITIONAL SERVICE WHEN REPLACING CONTROL UNIT

ADDITIONAL SERVICE WHEN REPLACING CONTROL UNIT : Description

INFOID:0000000003794732

Perform the system initialization when replacing BCM, replacing Intelligent Key or registering an additional Intelligent Key.

ADDITIONAL SERVICE WHEN REPLACING CONTROL UNIT : Special Repair Requirement

INFOID:0000000003794733

Refer to the CONSULT-III operation manual for the initialization procedure.

FUNCTION DIAGNOSIS

POWER DOOR LOCK SYSTEM

System Diagram

INFOID:0000000003794734

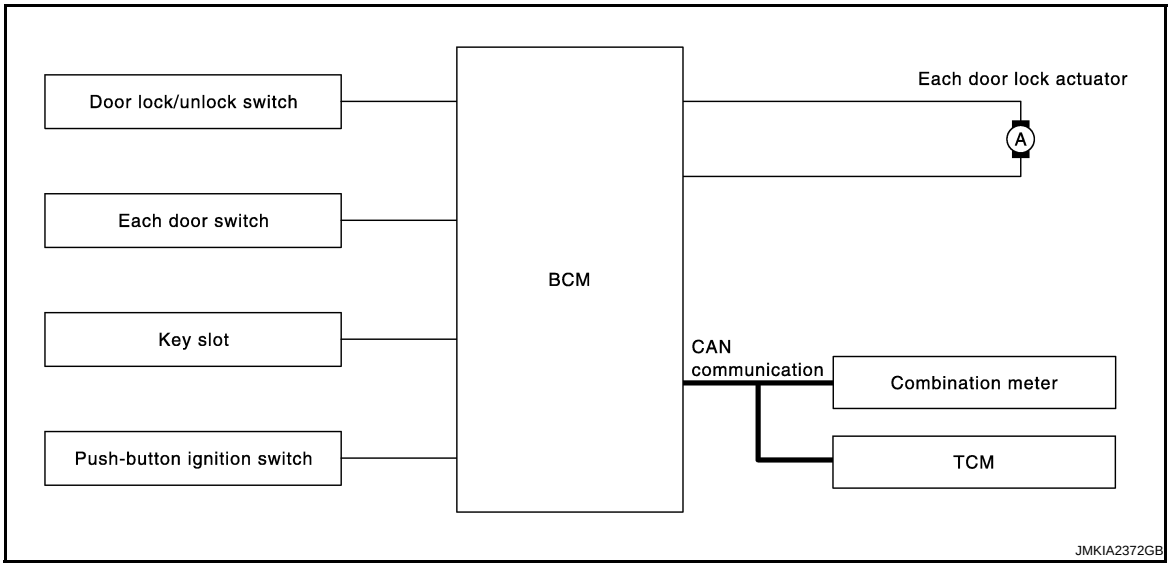

System Description

INFOID:0000000003794735

DOOR LOCK FUNCTION

- The door lock and unlock switch (driver side) are build into power window main switch.
- Interlocked with the locking operation of door lock and unlock switch, door lock actuators of all doors are locked.
- Interlocked with the unlocking operation of door lock and unlock switch, door lock actuators of all doors and are unlocked.
- When ignition switch is ON and BCM receives air bag deployment signal, it operates automatically to unlock all doors. Air bag diagnosis sensor unit sends the air bag deployment signal to BCM.

Door Key Cylinder

- With the door key inserted in the door key cylinder on driver side, turning the door key cylinder to “LOCK”, locks door lock actuator of driver side door.
- With the door key inserted in the door key cylinder on driver side, turning the door key cylinder to “UNLOCK”, unlocks door lock actuator of driver side door.

Component Parts Location

INFOID:0000000003794736

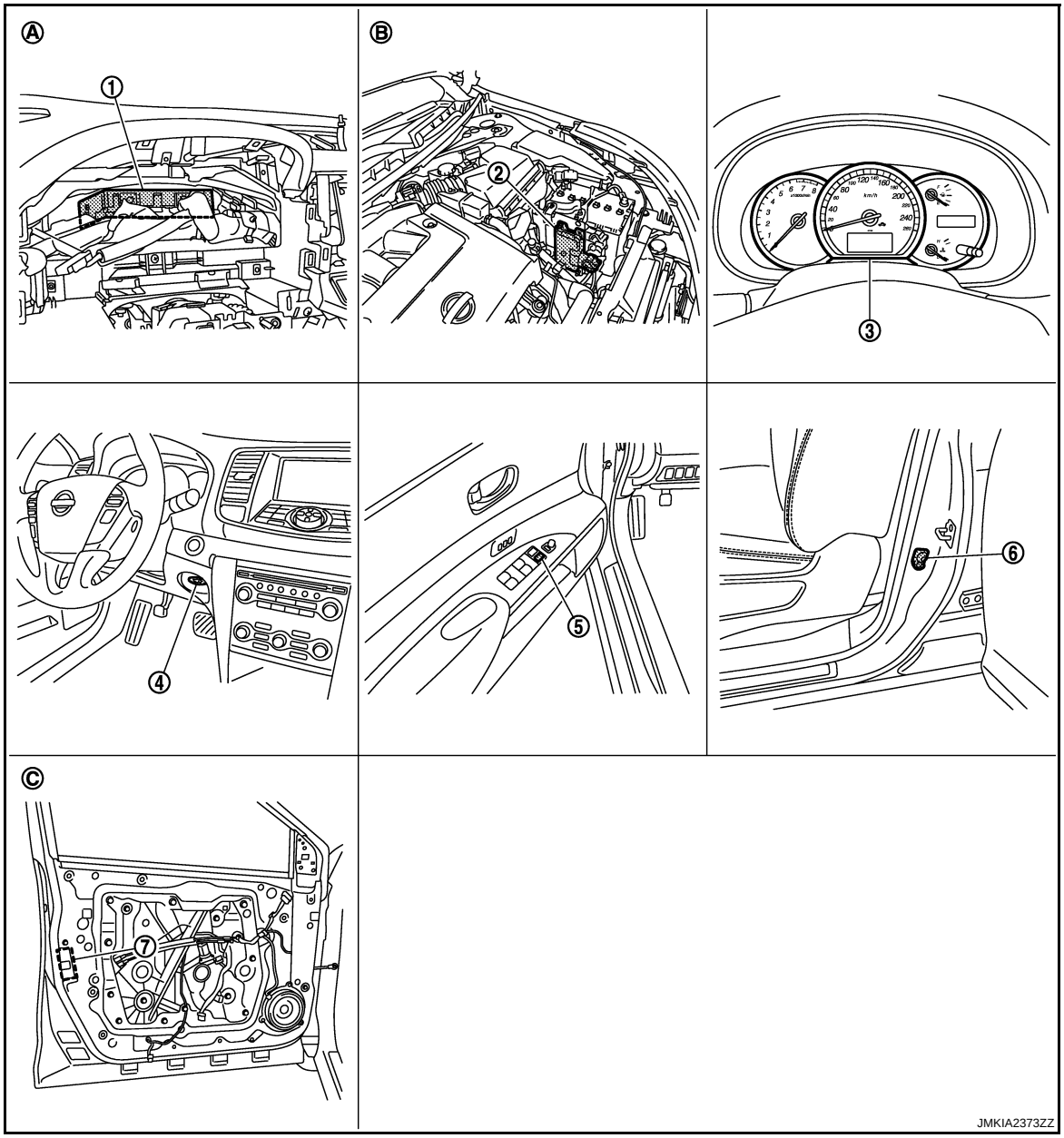

1. BCM M118, M119, M121, M122, M123
2. TCM F23
3. Combination meter M34
4. Key slot M99
5. Power window main switch (door lock and unlock switch) D5, D6
6. Front door switch (driver side) B34
7. Front door lock assembly (driver side) D9

A. Behind the combination meter
B. Engine room LH
C. View with front door finisher removed

Component Description

INFOID:0000000003794737

Item	Function
BCM	Controls the door lock function and room lamp function.
Door lock and unlock switch	Inputs lock or unlock signal to BCM.
Front door lock assembly (door lock actuator)	Outputs lock/unlock signal from BCM and locks/unlocks each door.

Item	Function
Front door lock assembly (unlock sensor)	Detects door lock condition of driver door.
Door switch	Inputs door open/close condition to BCM.
Key slot	Inputs key insert/remove signal to BCM.
Combination meter	• Receives buzzer signal from BCM via CAN communication line, and sounds the buzzer. • Transmits vehicle speed signal to CAN communication line.
TCM	Transmits shift position signal to BCM via CAN communication line.

INTELLIGENT KEY SYSTEM

INTELLIGENT KEY SYSTEM

INTELLIGENT KEY SYSTEM : System Diagram

INFOID:0000000003794738

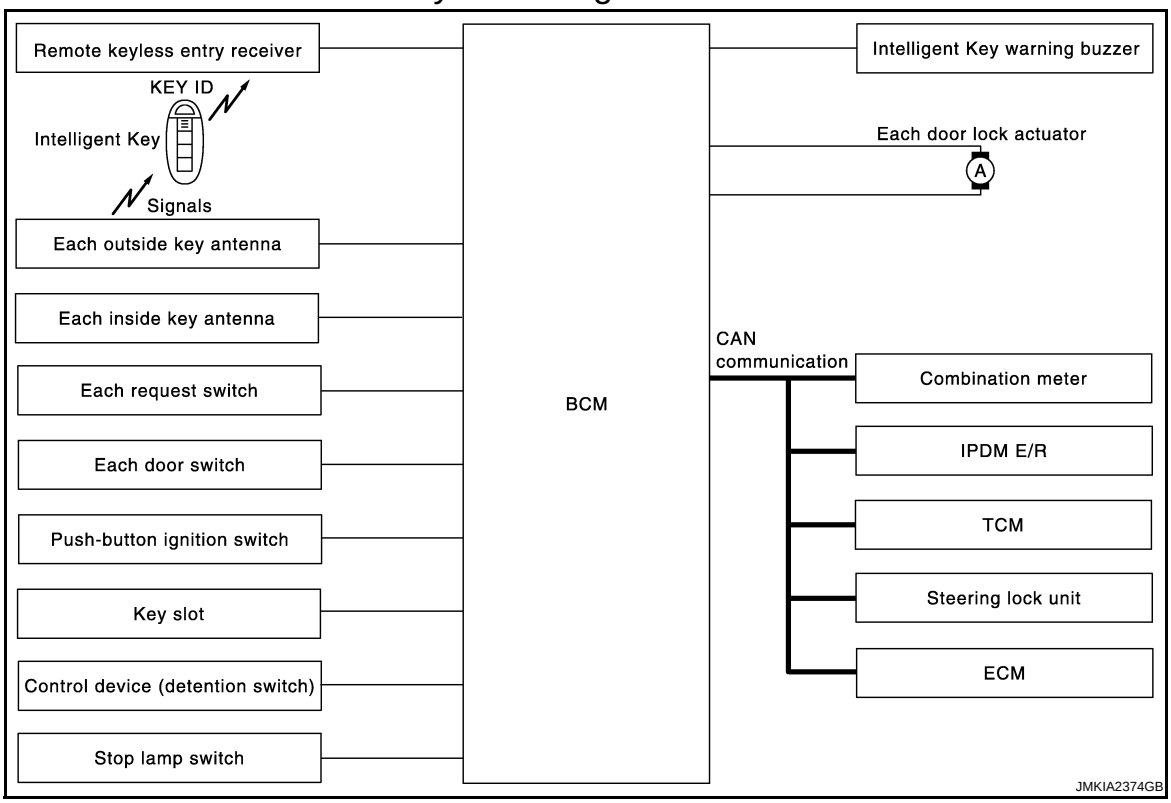

INTELLIGENT KEY SYSTEM : System Description

INFOID:0000000003794739

- The Intelligent Key system is a system that makes it possible to lock and unlock the door locks (door lock/unlock function) by carrying the Intelligent Key, which operates based on the results of electronic ID verification using two-way communications between the Intelligent Key and the vehicle (BCM).
  CAUTION:
  The driver should always carry the Intelligent Key
- The settings for each function can be changed with the CONSULT-III.
- If an Intelligent Key is lost, a new Intelligent Key can be registered. A maximum of 4 Intelligent Keys can be registered.
- It is possible to perform a diagnosis on the system and register an Intelligent Key with CONSULT-III.

Function	Description	Refer
Door lock function	Lock/unlock can be performed by pressing the request switch.	DLK-17
Remote keyless entry function	Lock/unlock can be performed by pressing the remote controller button of the Intelligent Key.	DLK-25
Trunk lid open function	The trunk lid can be opened by carrying the Intelligent Key and pressing the trunk lid opener request switch.	DLK-21
Key reminder function	The key reminder buzzer sounds a warning if the door is locked with the key left inside the vehicle.	DLK-28
Warning function	If an action that does not meet the operating condition of the Intelligent Key system is taken, the buzzer sounds to inform the driver.	DLK-31
Engine start function	The engine be turned on while carrying the Intelligent Key.	SEC-9

INTELLIGENT KEY SYSTEM : Component Parts Location

INFOID:0000000003794740

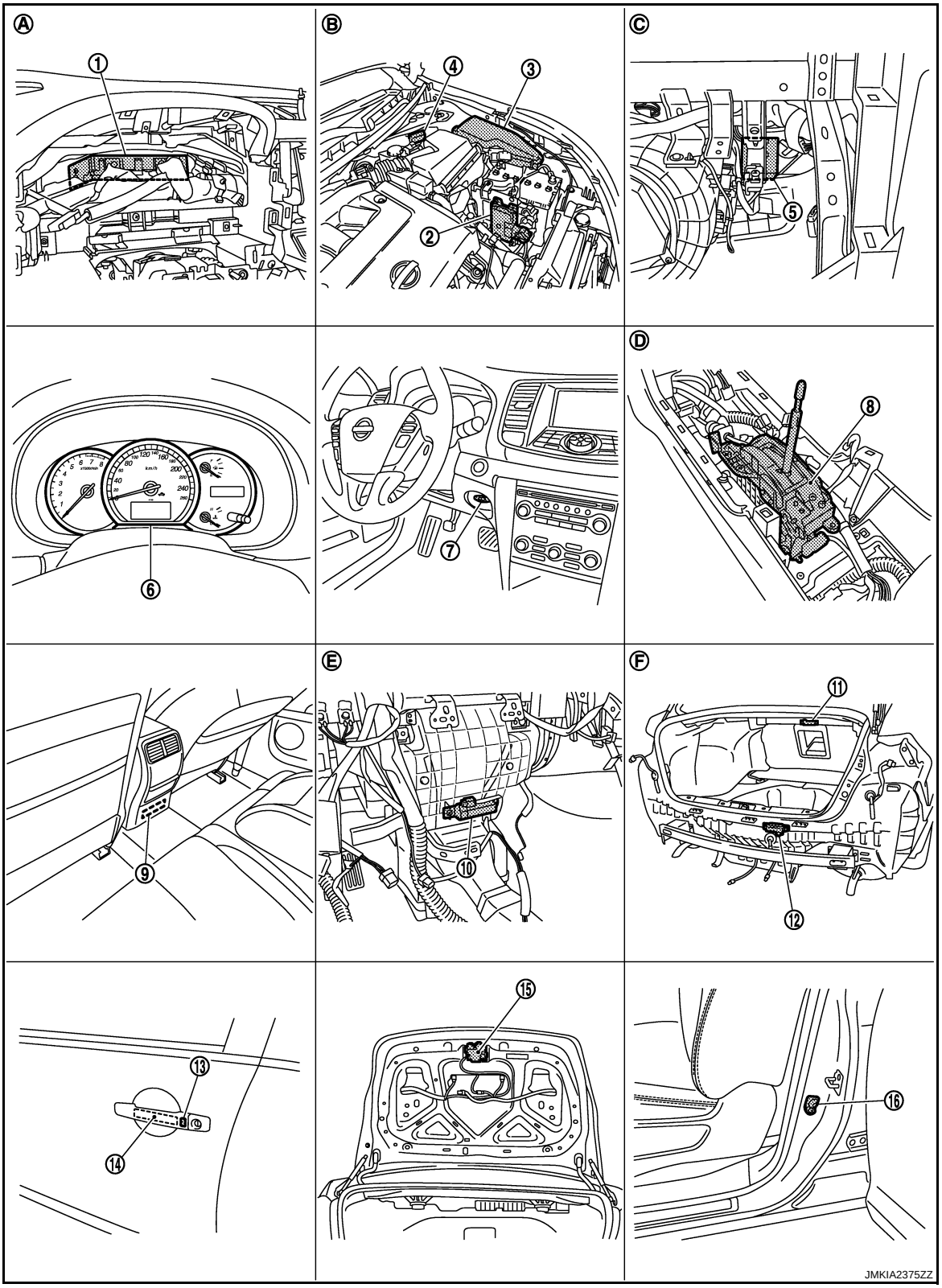

1. BCM M118, M119, M120, M121, M122, M123
2. TCM F23
3. IPDM E/R E10, E11
4. Intelligent Key warning buzzer E25
5. Remote keyless entry receiver M78
6. Combination meter M34
7. Key slot M99
8. Control device (detention switch) M57
9. Inside key antenna (console) M262

10. Inside key antenna (instrument center) M105
11. Inside key antenna (trunk room) B86
12. Outside key antenna (rear bumper) D85
13. Front outside handle LH (request switch) D11
14. Front outside handle LH (outside key antenna) D12
15. Trunk lid lock assembly (trunk lid opener actuator) T5
16. Front door switch (driver side) B34

A. Behind the combination meter
B. Engine room (LH)
C. Behind the instrument lower panel RH
D. Behind the center console
E. Behind the audio unit
F. View with rear bumper removed

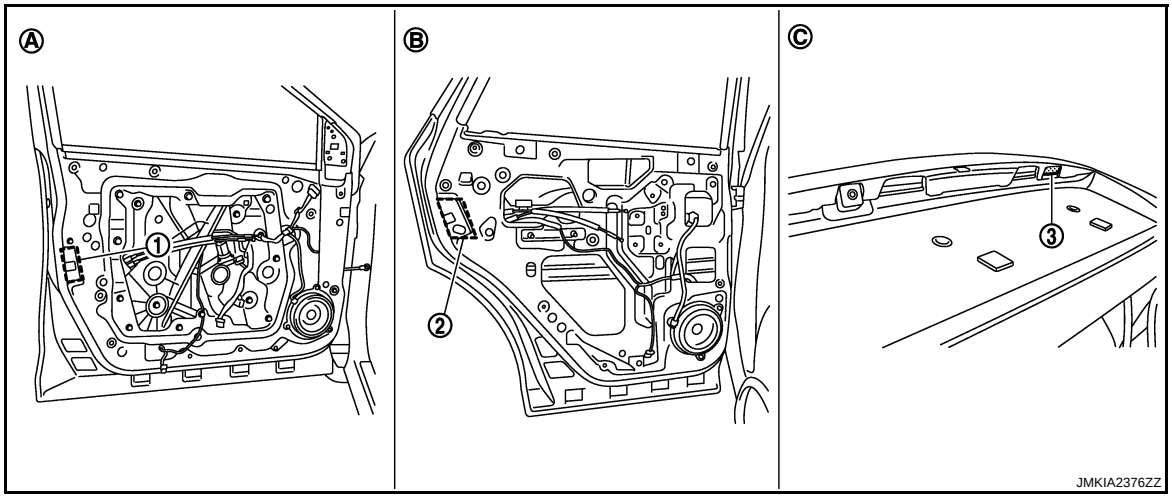

1. Front door lock assembly (driver side) D9
2. Rear door lock assembly LH D85
3. Trunk lid opener request switch T6

A. View with front door finisher removed
B. View with rear door finisher removed
C. View with trunk lid

INTELLIGENT KEY SYSTEM : Component Description

INFOID:0000000003794741

Item	Function
BCM	Controls the Intelligent Key system.
Front door lock assembly (door lock actuator)	Outputs lock/unlock signal from BCM and locks/unlocks each door.
Front door lock assembly (unlock sensor)	Detects door lock condition of driver door.
Door switch	Inputs door open/close condition to BCM.
Remote keyless entry receiver	Receives lock/unlock signal from the Intelligent Key, and then transmits to BCM.
Request switch	Inputs lock/unlock operation to BCM.
Intelligent Key	Transmits button operation to remote keyless entry receiver.
Outside key antenna	Detects if Intelligent Key is outside the vehicle.
Inside key antenna	Detects if Intelligent Key is inside the vehicle.
Intelligent Key warning buzzer	Warns the user of the lock/unlock condition and inappropriate operations with the buzzer sound.

DOOR LOCK FUNCTION

DOOR LOCK FUNCTION : System Diagram

INFOID:0000000003794742

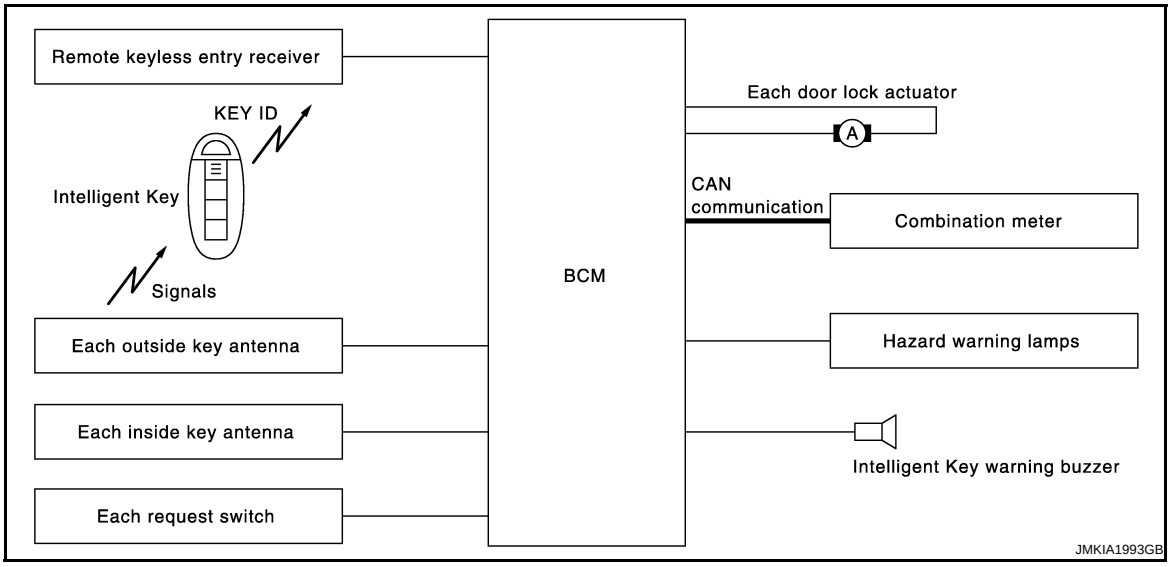

DOOR LOCK FUNCTION : System Description

INFOID:0000000003794743

Only when pressing the request switch, it is possible to lock and unlock the door by carrying the Intelligent Key.

OPERATION DESCRIPTION

- When the BCM detects that each door request switch is pressed, it activates the outside key antenna and inside key antenna corresponding to the pressed door request switch and transmits the request signal to the Intelligent Key. And then, check that the Intelligent Key is near the door.
- If the Intelligent Key is within the outside key antenna detection area, it receives the request signal and transmits the key ID signal to the BCM via remote keyless entry receiver.
- BCM receives the key ID signal and compares it with the registered key ID.
- BCM lock/unlock each door and sounds Intelligent Key warning buzzer (lock: 2 time, unlock: 1 times) at the same time as a reminder.

OPERATION CONDITION

If the following conditions are satisfied, door lock/unlock operation is performed when the request switch is operated.

Each request switch operation	Operation condition
Lock operation	• All doors are closed • Ignition switch is in the OFF position • Intelligent Key is out of key slot • Intelligent Key is outside the vehicle • Intelligent Key is within outside key antenna detection area
Unlock Operation	• Intelligent Key is outside the vehicle • Intelligent Key is within outside key antenna detection area *

*: Even with a registered Intelligent Key remaining inside the vehicle, door locks can be unlocked from outside of the vehicle with a spare Intelligent Key as long as key IDs are different.

OUTSIDE KEY ANTENNA DETECTION AREA

The outside key antenna detection area of door lock/unlock function is in the range of approximately 80 cm (31.50 in) surrounding the driver and passenger door handles and (1) and trunk lid opener request switch (2). However, this operating range depends on the ambient conditions.

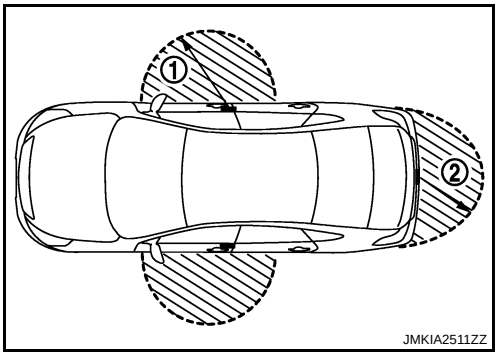

HAZARD AND BUZZER REMINDER FUNCTION

During lock, unlock, operation by each request switch, the hazard warning lamps and Intelligent Key warning buzzer will blink or honk as a reminder.
When doors are locked, unlocked by each request switch, BCM honks Intelligent Key warning buzzer as a reminder and blinks.

Operating Function of Hazard and Buzzer Reminder

Operation	Hazard warning lamp flash	Intelligent Key warning buzzer honk
Unlock	Once	Once
Lock	Twice	Twice

How to Change Hazard and Buzzer Reminder Mode
Refer to SEC-22, "INTELLIGENT KEY : CONSULT-III Function (BCM - INTELLIGENT KEY)".

AUTO DOOR LOCK FUNCTION

When all doors are locked, ignition switch is in OFF position and key switch is OFF (Intelligent Key is not inserted in key slot). Doors are unlocked with door request switch.
When BCM does not receive the following signals within 60 seconds, all doors are locked.
- Door switch is ON (door is opened)
- Door is locked
- Ignition switch is ON (ignition switch is pressed)
- Key switch is ON (Intelligent Key is inserted in key slot)

Auto door lock mode can be changed by “AUTO LOCK SET” mode in “WORK SUPPORT”. Refer to SEC-22, "INTELLIGENT KEY : CONSULT-III Function (BCM - INTELLIGENT KEY)".

LIST OF OPERATION RELATED PARTS

The operation related parts are marked with ×.

Door lock function	Intelligent Key	Key slot	Remote keyless entry receiver	Door switch	Door request switch	Door lock actuator	Inside key antenna	Outside key antenna	Intelligent Key warning buzzer	CAN communication system	BCM	Hazard warning lamp	Push-button ignition switch	Combination meter
Door lock/unlock function by request switch	×	×	×	×	×	×	×	×			×			
Hazard and buzzer reminder function for door lock/un-lock operation									×	×	×	×		×
Key reminder function	×	×	×	×	×	×	×	×	×		×	×		
Auto door lock function	×	×		×	×	×					×		×	

DOOR LOCK FUNCTION : Component Parts Location

INFOID:0000000003841720

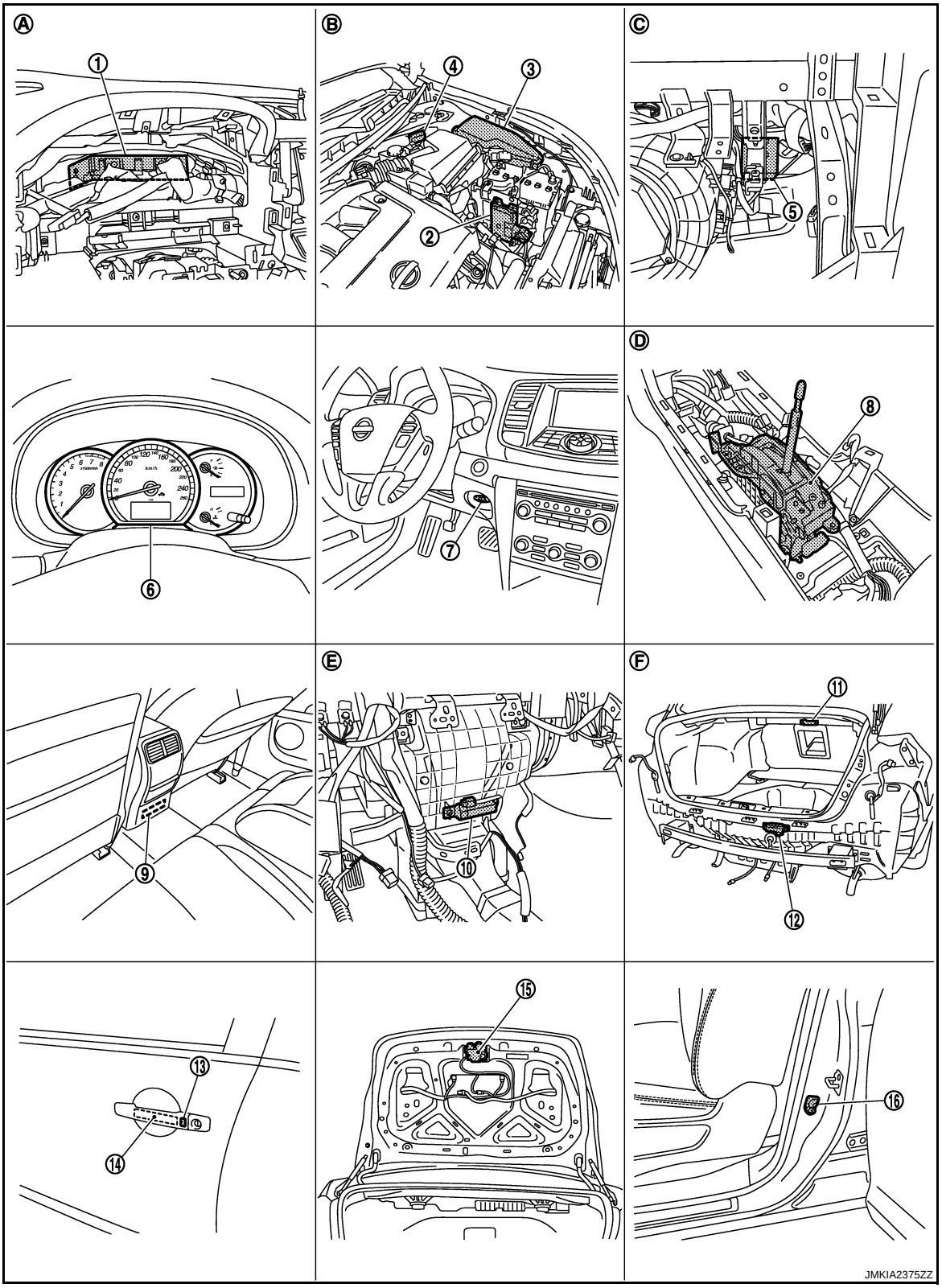

1. BCM M118, M119, M120, M121, M122, M123
2. TCM F23
3. IPDM E/R E10, E11
4. Intelligent Key warning buzzer E25
5. Remote keyless entry receiver M78
6. Combination meter M34
7. Key slot M99
8. Control device (detention switch) M57
9. Inside key antenna (console) M262

10. Inside key antenna (instrument center) M105
11. Inside key antenna (trunk room) B86
12. Outside key antenna (rear bumper) D85
13. Front outside handle LH (request switch) D11
14. Front outside handle LH (outside key antenna) D12
15. Trunk lid lock assembly (trunk lid opener actuator) T5
16. Front door switch (driver side) B34

A. Behind the combination meter
B. Engine room (LH)
C. Behind the instrument lower panel RH
D. Behind the center console
E. Behind the audio unit
F. View with rear bumper removed

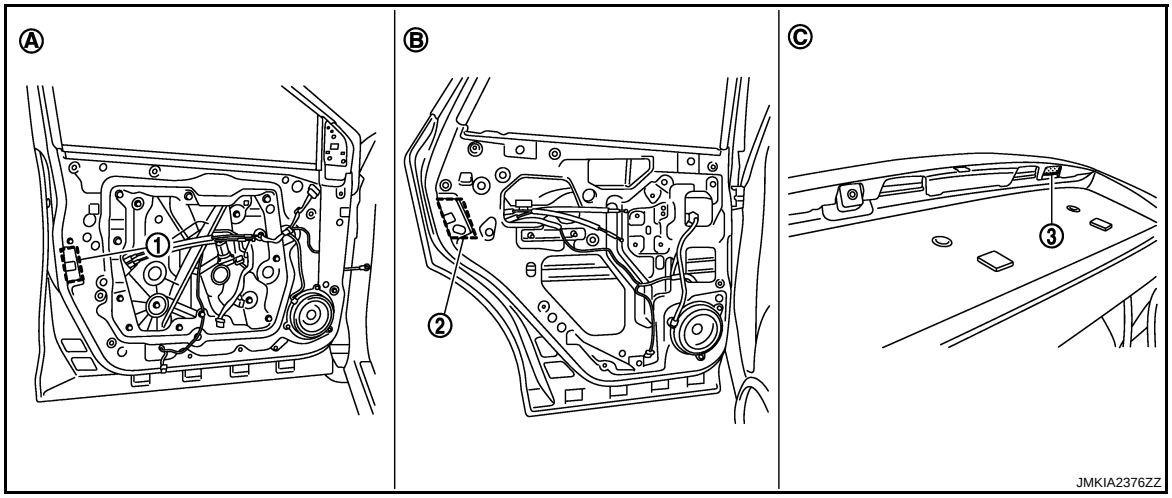

1. Front door lock assembly (driver side) D9
2. Rear door lock assembly LH D85
3. Trunk lid opener request switch T6

A. View with front door finisher removed
B. View with rear door finisher removed
C. View with trunk lid

DOOR LOCK FUNCTION : Component Description

INFOID:0000000003794745

Item	Function
BCM	Controls the door lock function.
Front door lock assembly (door lock actuator)	Output lock/unlock signal from BCM and locks/unlocks each door.
Front door lock assembly (unlock sensor)	Detects door lock condition of driver door.
Door switch	Input door open/close condition to BCM.
Remote keyless entry receiver	Receives lock/unlock signal from the Intelligent Key, and then transmits to BCM.
Request switch	Input lock/unlock operation to BCM.
Intelligent Key	Transmits button operation to remote keyless entry receiver.
Outside key antenna	Detects if Intelligent Key is outside the vehicle.
Inside key antenna	Detects if Intelligent Key is inside the vehicle.
Combination meter	Receives hazard warning lamp signal from BCM and blinks turn signal indicators.
Intelligent Key warning buzzer	Warns the user of the lock/unlock condition and inappropriate operations with the buzzer sound.

TRUNK OPEN FUNCTION

TRUNK OPEN FUNCTION : System Diagram

INFOID:0000000003794746

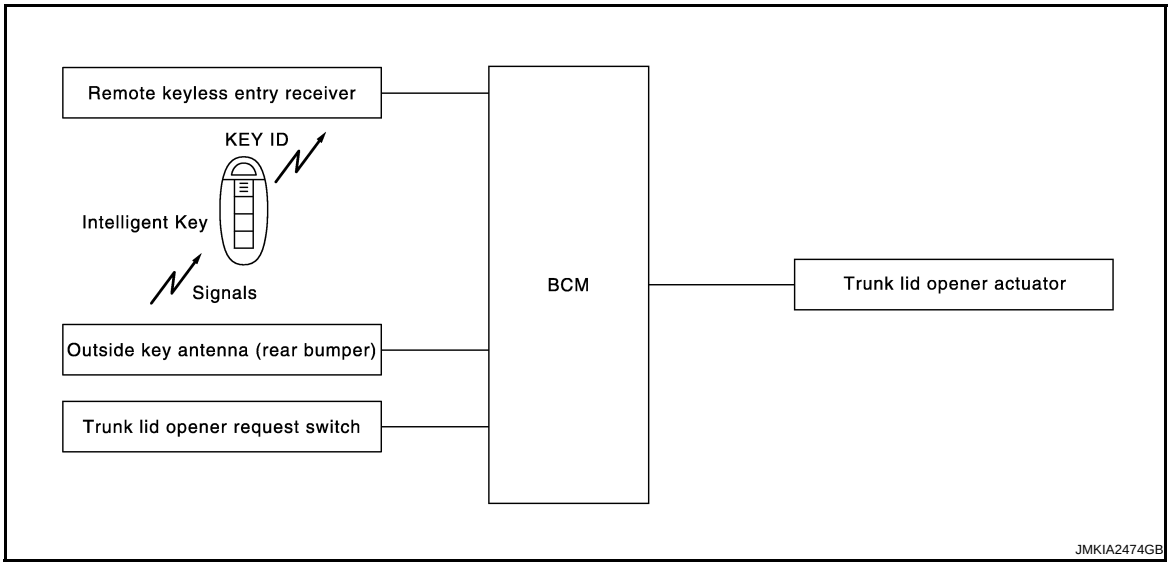

TRUNK OPEN FUNCTION : System Description

INFOID:0000000003794747

TRUNK LID OPENER

- When the BCM detects that trunk lid opener request switch is pressed, it activates the outside key antenna (rear bumper) and inside key antenna and transmits the request signal to the Intelligent Key. And then, check that the Intelligent Key is near the trunk lid.
- If the Intelligent Key is within the outside key antenna detection area, it receives the request signal and transmits the key ID signal to the BCM via remote keyless entry receiver.
- BCM receives the key ID signal and compares it with the registered key ID.
- BCM opens the trunk lid and sounds Intelligent Key warning buzzer and blinks hazard warning lamp at the same time as a reminder.

TRUNK LID OPENER OPERATION

When trunk lid opener switch is ON, BCM opens trunk opener actuator.
BCM can open trunk lid opener actuator when
- vehicle speed is less than 5 km/h (3MPH)
- vehicle security system is disarmed or in the pre-armed phase

BCM does not open trunk lid opener actuator when
- vehicle speed is more than 5 km/h (3MPH)
- vehicle security system is armed or in the alarm phase
- Intelligent Key is inserted in key slot

OUTSIDE KEY ANTENNA DETECTION AREA

The outside key antenna detection area of trunk lid open function is in the range of approximately 80 cm (31.50 in) surrounding the trunk lid opener request switch (1). However, this operating range depends on the ambient conditions.

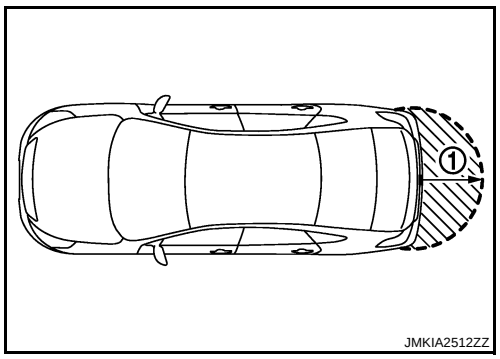

HAZARD AND BUZZER REMINDER FUNCTION

When trunk lid opening operation is performed by trunk lid opener request switch, the hazard warning lamps blink and Intelligent Key warning buzzer sounds as a reminder.

LIST OF OPERATION RELATED PARTS

The operation related parts are marked with ×.

Door lock function	Intelligent Key	Key slot	Remote keyless entry receiver	Door switch	Door request switch	Door lock actuator	Inside key antenna	Outside key antenna (Rear bumper)	Intelligent Key warning buzzer	CAN communication system	BCM	Hazard warning lamp	Trunk lid opener request switch
Trunk lid opener function by trunk lid opener switch (Carrying Intelligent Key)	×	×	×	×	×	×	×	×		×	×		×
Hazard and buzzer reminder function for door lock/unlock operation									×	×	×	×	

TRUNK OPEN FUNCTION : Component Parts Location

INFOID:0000000003841721

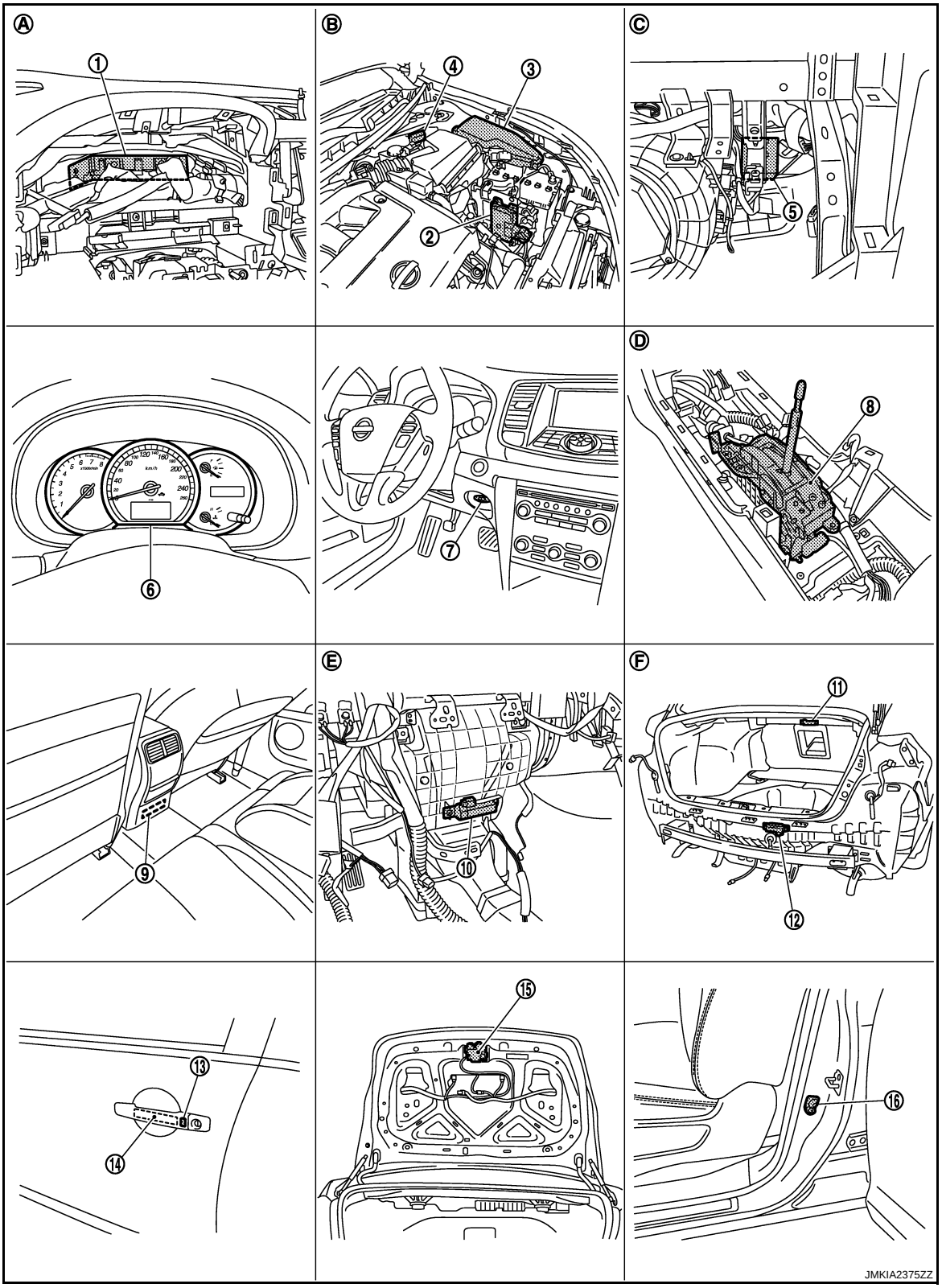

1. BCM M118, M119, M120, M121, M122, M123
2. TCM F23
3. IPDM E/R E10, E11
4. Intelligent Key warning buzzer E25
5. Remote keyless entry receiver M78
6. Combination meter M34
7. Key slot M99
8. Control device (detention switch) M57
9. Inside key antenna (console) M262

10. Inside key antenna (instrument center) M105
11. Inside key antenna (trunk room) B86
12. Outside key antenna (rear bumper) D85
13. Front outside handle LH (request switch) D11
14. Front outside handle LH (outside key antenna) D12
15. Trunk lid lock assembly (trunk lid opener actuator) T5
16. Front door switch (driver side) B34

A. Behind the combination meter
B. Engine room (LH)
C. Behind the instrument lower panel RH
D. Behind the center console
E. Behind the audio unit
F. View with rear bumper removed

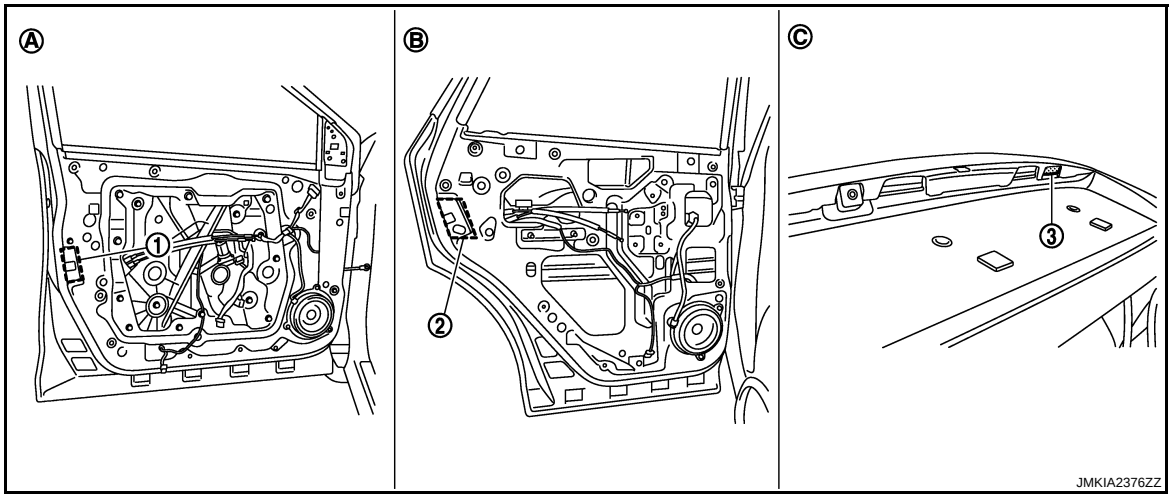

1. Front door lock assembly (driver side) D9
2. Rear door lock assembly LH D85
3. Trunk lid opener request switch T6

A. View with front door finisher removed
B. View with rear door finisher removed
C. View with trunk lid

TRUNK OPEN FUNCTION : Component Description

INFOID:0000000003794749

Item	Function
BCM	Controls the trunk lid opener function and room lamp function.
Trunk lid opener switch	Inputs press/degrees signal to BCM.
Door lock actuator	Receives lock/unlock signal from BCM and locks/unlocks each door.
Door switch	Inputs door open/close condition to BCM.
Remote keyless entry receiver	Receives lock/unlock signal from the Intelligent Key, and then transmits to BCM.
Trunk lid opener request switch	Inputs lock/unlock operation to BCM.
Intelligent Key	Transmits button operation to remote keyless entry receiver.
Outside key antenna (rear bumper)	Detects if Intelligent Key is outside the vehicle.
Inside key antenna	Detects if Intelligent Key is inside the vehicle.
Intelligent Key warning buzzer	Warns the user of the trunk lid opener/close condition and inappropriate operations with the buzzer sound.

REMOTE KEYLESS ENTRY FUNCTION

REMOTE KEYLESS ENTRY FUNCTION : System Diagram

INFOID:0000000003794750

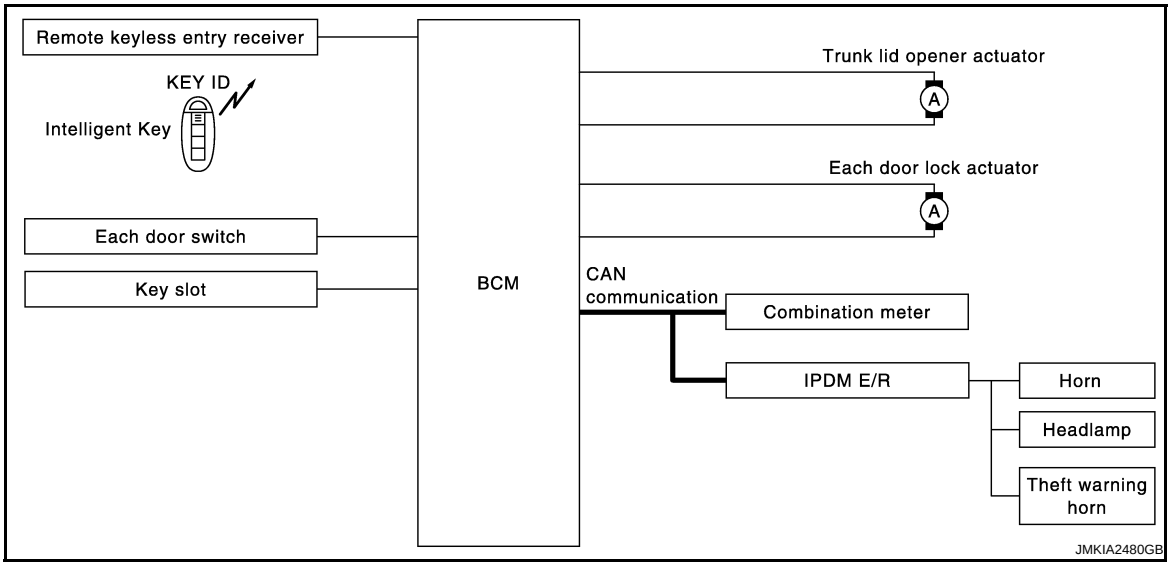

REMOTE KEYLESS ENTRY FUNCTION : System Description

INFOID:0000000003794751

The Intelligent Key has the same functions as the remote control entry system. Therefore, it can be used in the same manner as the remote controller by operating the door lock/unlock button.

OPERATION

Remote keyless entry system controls operation of the following items

- Door lock/unlock
- Trunk lid open
- Hazard and horn reminder
- Auto door lock

OPERATION AREA

To ensure the Intelligent Key works effectively, use within 1 m (3 ft) range of each door, however the operable range may differ according to surroundings.

DOOR LOCK/UNLOCK FUNCTION

- When door lock/unlock button of the Intelligent Key is pressed, lock signal or unlock signal is transmitted from Intelligent Key to BCM via remote keyless entry receiver.
- When BCM receives the door lock/unlock signal, it operates door lock actuator, blinks the hazard lamp (lock: 2 time, unlock: 1 times) and inputs horn chirp signal to IPDM E/R at the same time as a reminder.
- IPDM E/R honks horn (lock: 2 time) as a reminder

OPERATION CONDITION

Remote controller operation	Operation condition	Operation
Lock	All doors closed	All doors lock
Unlock	Intelligent Key is out of key slot	All doors unlock

TRUNK LID OPENER FUNCTION

When trunk lid button of Intelligent Key is pressed for more than 1 second, trunk lid open. For a detailed description, refer to DLK-21, "TRUNK OPEN FUNCTION : System Description".

HAZARD AND HORN REMINDER FUNCTION

When doors are locked or unlocked by Intelligent Key, BCM blinks hazard warning lamps as a reminder.
The hazard and horn reminder has a horn chirp mode (C mode) and a non-horn chirp mode (S mode).

Operating Function of Hazard and Horn Reminder

	C mode		S mode	
Intelligent Key operation	Lock	Unlock	Lock	Unlock
Hazard warning lamp flash	Twice	Once	Twice	—
Horn sound	Once	—	—	—

Hazard and horn reminder does not operate if any door switch is ON (any door is OPEN).

How to Change Hazard and Horn Reminder Mode

With CONSULT-III

Refer to SEC-22, "INTELLIGENT KEY : CONSULT-III Function (BCM - INTELLIGENT KEY)".

Without CONSULT-III

When LOCK and UNLOCK signals are sent from the Intelligent Key for more than 2 seconds at the same time, the hazard and horn reminder mode is changed and hazard warning lamp blinks and horn sounds as follows:

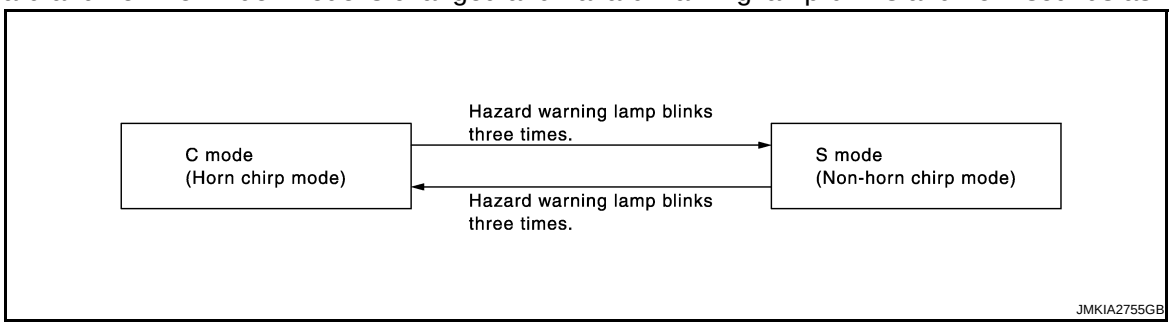

AUTO DOOR LOCK FUNCTION

When all doors are locked, ignition switch is OFF (ignition switch is not pressed) and key switch is OFF (Intelligent Key is not inserted in key slot), doors are unlocked with Intelligent Key button. When BCM does not receive the following signals within 30 seconds, all doors are locked.

- Door switch is ON (door is opened)
- Door is locked
- Ignition switch is ON
- Key switch is ON (Intelligent Key is inserted in key slot)

Auto door lock mode can be changed by “AUTO LOCK SET” mode in “WORK SUPPORT”. Refer to SEC-22, "INTELLIGENT KEY : CONSULT-III Function (BCM - INTELLIGENT KEY)".

LIST OF OPERATION RELATED PARTS

The operation related parts are marked with ×.

Remote keyless entry functions	Intelligent Key	Key slot	Door request switch	Door switch	Door lock actuator	CAN communication system	BCM	Combination meter	Hazard warning lamp	Horn	IPDM E/R
Door lock/unlock function by remote control button	×	×		×	×		×			×	
Hazard and horn reminder function	×					×	×	×	×	×	×
Auto door lock function	×	×		×			×				

REMOTE KEYLESS ENTRY FUNCTION : Component Parts Location

INFOID:0000000003841722

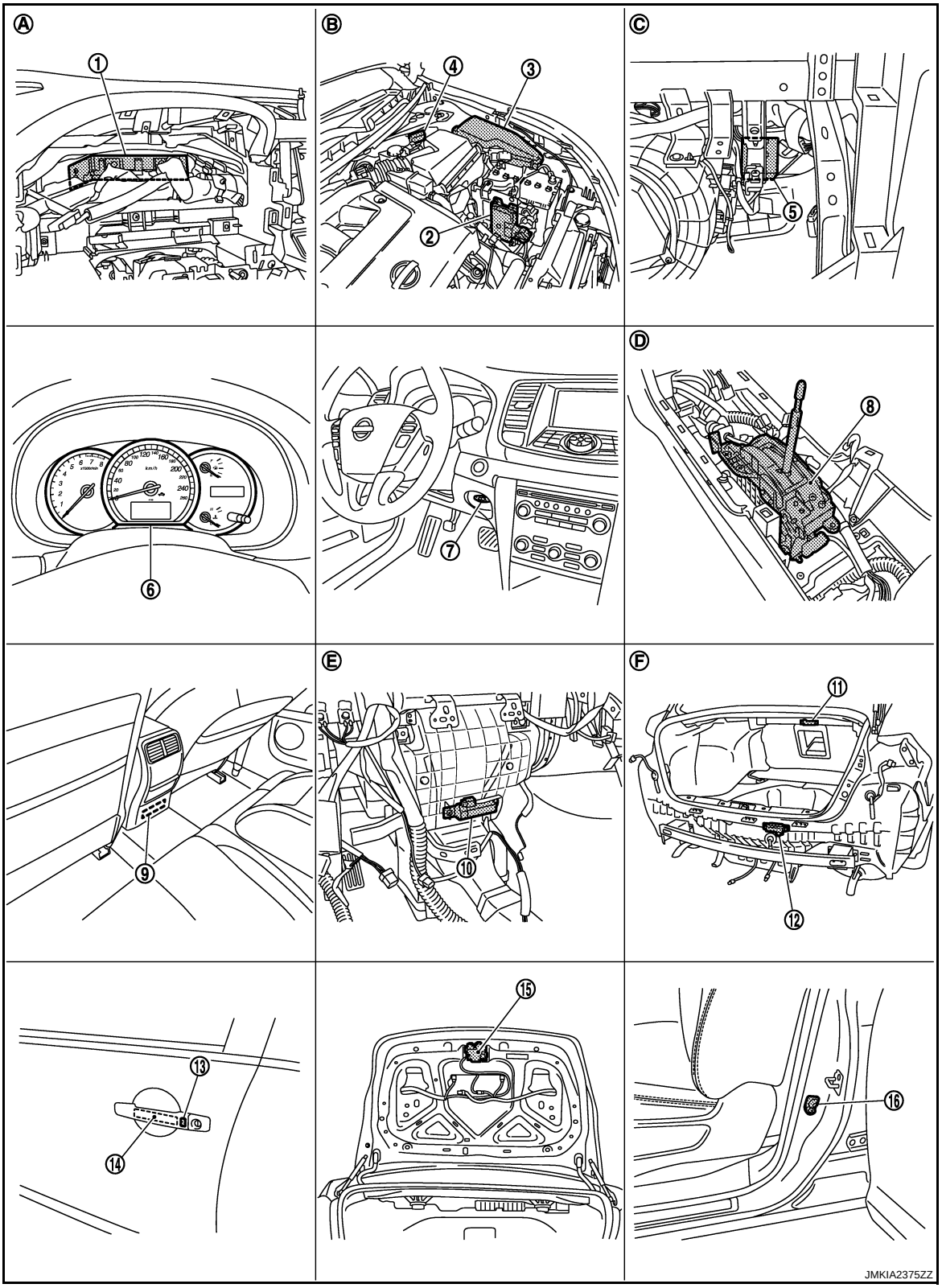

1. BCM M118, M119, M120, M121, M122, M123
2. TCM F23
3. IPDM E/R E10, E11
4. Intelligent Key warning buzzer E25
5. Remote keyless entry receiver M78
6. Combination meter M34
7. Key slot M99
8. Control device (detention switch) M57
9. Inside key antenna (console) M262

10. Inside key antenna (instrument center) M105	11. Inside key antenna (trunk room) B86	12. Outside key antenna (rear bumper) D85
13. Front outside handle LH (request switch) D11	14. Front outside handle LH (outside key antenna) D12	15. Trunk lid lock assembly (trunk lid opener actuator) T5
16. Front door switch (driver side) B34		
A. Behind the combination meter	B. Engine room (LH)	C. Behind the instrument lower panel RH
D. Behind the center console	E. Behind the audio unit	F. View with rear bumper removed

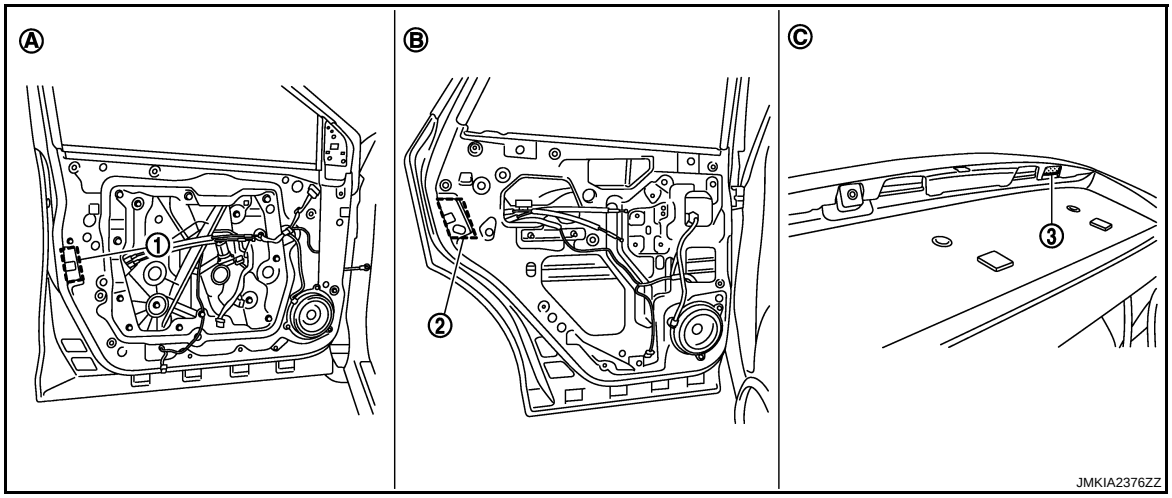

1. Front door lock assembly (driver side) D9	2. Rear door lock assembly LH D85	3. Trunk lid opener request switch T6
A. View with front door finisher removed	B. View with rear door finisher removed	C. View with trunk lid

REMOTE KEYLESS ENTRY FUNCTION : Component Description

INFOID:0000000003794753

Item	Function
BCM	Controls the door lock function and room lamp function.
Door lock actuator	Outputs lock/unlock signal from BCM and locks/unlocks each door.
Remote keyless entry receiver	Receives lock/unlock signal from the Intelligent Key, and then transmits to BCM.
Intelligent Key	Transmits button operation to remote keyless entry receiver.

KEY REMINDER FUNCTION

KEY REMINDER FUNCTION : System Description

INFOID:0000000003794754

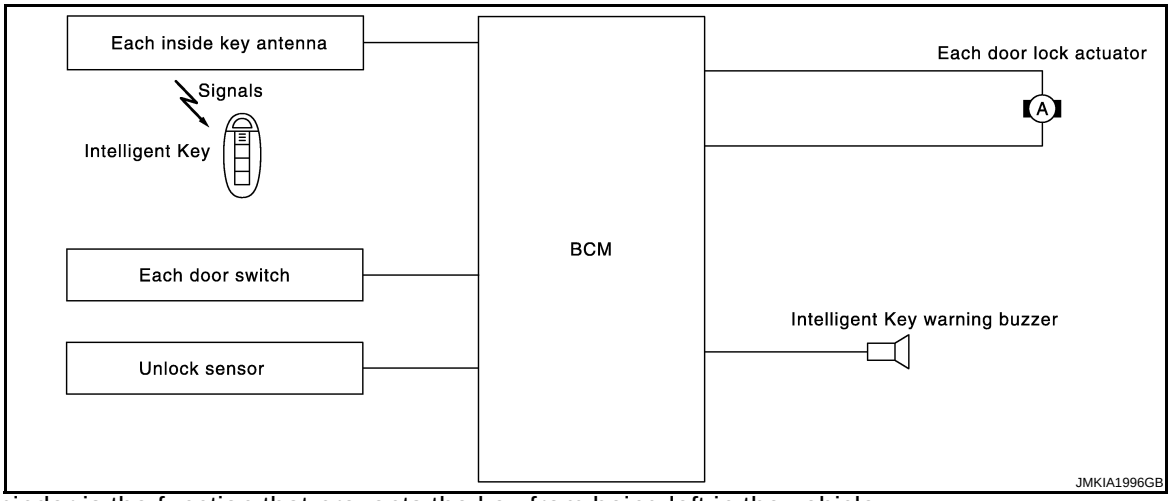

Key reminder is the function that prevents the key from being left in the vehicle.

Key reminder has the following 3 functions.

Key remainder function	Operation condition	Operation
Driver door closed*	Right after driver side door is closed under the following conditions • Door lock operation is performed • Driver side door is opened • Driver side door is in lock state	All doors unlock
Door is open or closed	Right after all doors are closed under the following conditions • Intelligent Key is inside the vehicle • Any door is opened • All doors are locked by door lock and unlock switch or door lock knob	• All doors unlock • Sound Intelligent Key warning buzzer
Trunk lid is closed	Right after trunk lid is closed under the following conditions • Intelligent Key is inside vehicle • All doors are closed • All doors are locked	• All doors unlock • Trunk lid can open with trunk lid opener switch • Sound Intelligent Key warning buzzer

*:If the door closing impact shocks the door lock knob or makes contact with baggage comma the door lock knob might activate the door locks accidentally comma but unlock operation will be perform in these cases.

CAUTION:

- **The above function operates when the Intelligent Key is inside the vehicle. However, there may be times when the Intelligent Key cannot be detected, and this function will not operate when the Intelligent Key is on the instrument panel, or in the glove box. Also, this system sometimes does not operate if the Intelligent Key is in the door pocket of an open door.**
- **Key reminder function is operated when the trunk lid is open/closed and the buzzers sound. If the following operations are performed, the key reminder function is cleared and buzzer sounds are stopped.**

- Remote controller door lock button operation of Intelligent Key
- Remote controller door unlock button operation of Intelligent Key
- When the trunk lid is closed, the Intelligent Key is not inside the vehicle
- When any door is open

KEY REMINDER FUNCTION : Component Parts Location

INFOID:0000000003841723

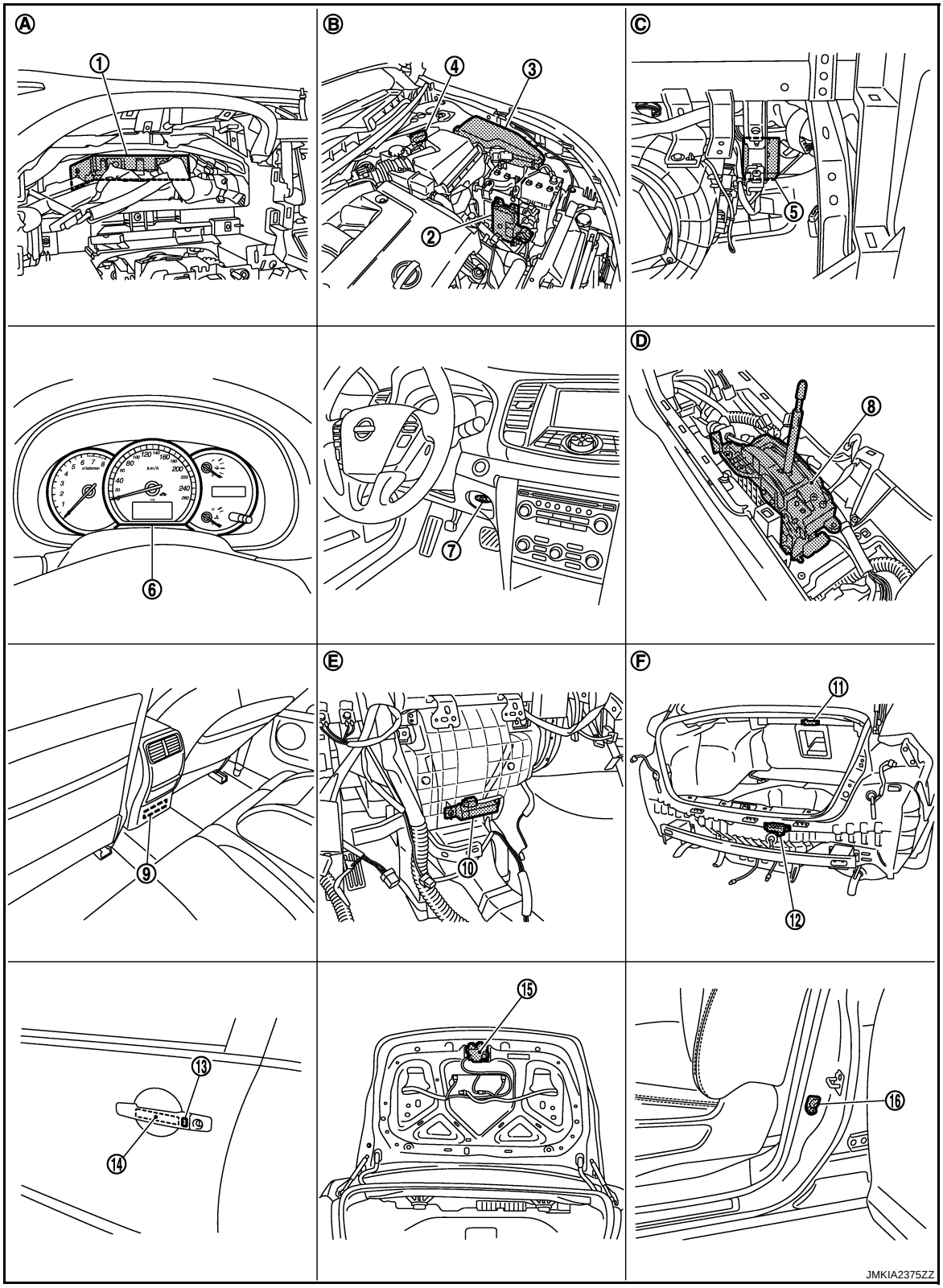

1. BCM M118, M119, M120, M121, M122, M123
2. TCM F23
3. IPDM E/R E10, E11
4. Intelligent Key warning buzzer E25
5. Remote keyless entry receiver M78
6. Combination meter M34
7. Key slot M99
8. Control device (detention switch) M57
9. Inside key antenna (console) M262

10. Inside key antenna (instrument center) M105	11. Inside key antenna (trunk room) B86	12. Outside key antenna (rear bumper) D85
13. Front outside handle LH (request switch) D11	14. Front outside handle LH (outside key antenna) D12	15. Trunk lid lock assembly (trunk lid opener actuator) T5
16. Front door switch (driver side) B34		
A. Behind the combination meter	B. Engine room (LH)	C. Behind the instrument lower panel RH
D. Behind the center console	E. Behind the audio unit	F. View with rear bumper removed

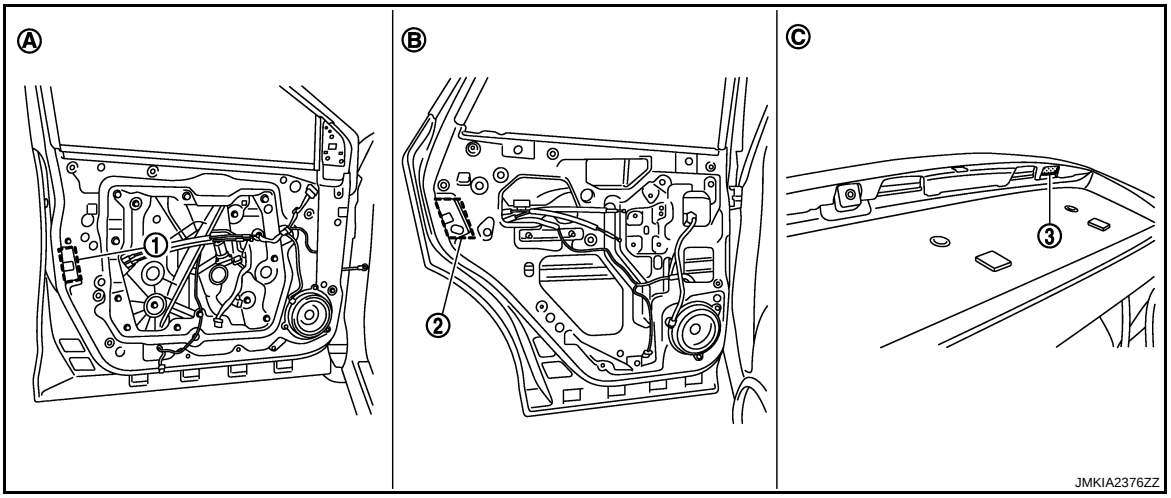

1. Front door lock assembly (driver side) D9	2. Rear door lock assembly LH D85	3. Trunk lid opener request switch T6
A. View with front door finisher removed	B. View with rear door finisher removed	C. View with trunk lid

WARNING FUNCTION

WARNING FUNCTION : System Description

INFOID:0000000003794756

OPERATION DESCRIPTION

The warning function are as per the following and are given to the user as warning information and warnings using combinations of Intelligent Key warning buzzer, KEY warning lamp, key slot illumination and information display in combination meter.

- Intelligent Key system malfunction
- OFF position warning
- P position warning
- ACC warning
- Take away warning
- Door lock operation warning
- Key warning
- Intelligent Key insert information
- Engine start information
- Steering lock information
- Intelligent key low battery warning
- Key ID warning

OPERATION CONDITION

Once one of the following conditions below is established, alert or warning will be executed.

Warning/Information functions	Operation procedure
Intelligent Key system malfunction	When a malfunction is detected in BCM, “KEY” warning lamp will illuminate.

Warning/Information functions		Operation procedure
OFF position warning	For internal	• Ignition switch: ACC position. • Door switch (driver side): ON (Door is open).
	For external	OFF position warning (for internal) is in active mode, driver side door is closed. **NOTE:** OFF position (for external) active only when each of the sequence has occurred as per the following: P position warning → ACC warning → OFF position warning (for internal) → OFF position warning (for internal)
P position warning		• Shift position: Any position except the P position. • Engine is running to stopped (ignition switch is ON to OFF).
ACC warning		• When P position warning is in active mode, shift position changes from the P position. • Ignition switch: ACC position.
Take away warning	Door is open to close	• Ignition switch: Any position except the LOCK position. • Door switch: ON to OFF (door is open to close). • Intelligent Key can not be detected inside the vehicle.
	Door is open	• Door switch: ON (door is open). • Key ID verification every 5 seconds when registered Intelligent Key can not be detected inside the vehicle.
	Push button-ignition switch operation	• Ignition switch: Any position except the LOCK position. • Press push-button ignition switch. • Intelligent Key can not be detected inside the vehicle.
	Intelligent Key is removed from key slot	When Intelligent Key is removed from key slot, Intelligent Key can not be detected inside the vehicle.
Door lock operation warning	Request switch operation	When request switch is pushed (lock operation) under the following conditions. • All doors are closed. • All doors are unlocked. • Intelligent Key is inside vehicle.
	Intelligent Key button operation	When Intelligent Key button is pushed (lock operation) under the following conditions. • Door switch: ON (any door is open). • For 3 seconds after Intelligent Key is removed from key slot.
Key warning		• Ignition switch is in the OFF position. • Driver side door switch: ON (driver side door is open). • Intelligent Key is inserted in key slot.
Intelligent Key insert information		• Door switch: ON to OFF (door is open to close). • Ignition switch: OFF to ON position. • Intelligent Key is out of key slot. • Intelligent Key can not be detected inside the vehicle.
Engine start information	Ignition switch is in the ON position	• Ignition switch: ON position. • Shift position: P position. • Engine is stopped.
	Ignition switch is in any position except the ON position	• Ignition switch: Any position except the ON position. • Shift position: P position. • Intelligent Key is inserted in key slot or Intelligent Key can be detected inside the vehicle.
Steering lock information		When steering lock can not be released after ignition switch is turned ON.
Intelligent Key low battery warning		When Intelligent Key is battery low, BCM is detected after ignition switch is turned ON.
Key ID warning		When registered Intelligent Key can not be detected inside the vehicle after ignition switch is turned ON.

WARNING METHOD

The following table shows the alarm or warning methods with chime.
Information display (combination meter), “KEY” indicator or key slot illumination when the warning conditions are met.

Warning/Information functions		"KEY" warning lamp	Information display (combination meter)	Key slot illumination	Warning chime	
					Combination meter buzzer	Intelligent Key warning buzzer
Intelligent Key system malfunction		Illuminate	—	—	—	—
OFF position warning	For internal	—	—	—	Activate	—
	For external	—	—	—	—	Activate
P position warning		—	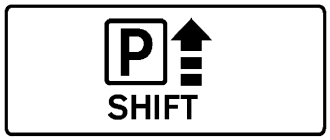 JMKIA0037GB	—	Activate	—
ACC warning		—	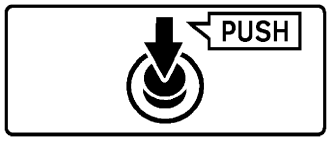 JMKIA0047GB	—	—	—
Take away warning	Door is open to close	—	JMKIA0036GB	Blink	Activate	Activate
	Door is open	—		Flash	—	—
	Push-ignition switch operation	—		Flash	Activate	—
	Intelligent Key is removed from key slot	—		Flash	—	—
Door lock operation warning	Request switch operation	—	—	—	—	Activate
	Intelligent Key operation	—	—	—	—	Activate
Key ID warning		—	JMKIA0036GB	—	—	—
Key warning		—	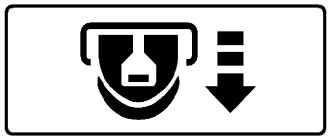 JMKIA0035GB	Flash	Activate	—

Warning/Information functions	"KEY" warning lamp	Information display (combination meter)	Key slot illumination	Warning chime	
				Combination meter buzzer	Intelligent Key warning buzzer
Intelligent Key insert information	—	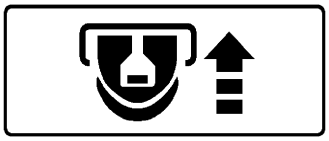 JMKIA0034GB	Flash	—	—
Engine start information	—	JMKIA0032GB	—	—	—
Steering lock information	—	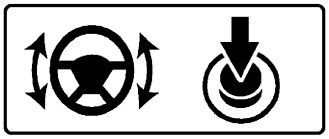 JMKIA0033GB	—	—	—
Intelligent Key low battery warning	—	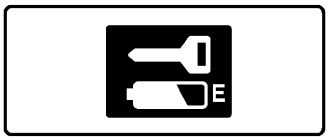 JMKIA0048GB	—	—	—

LIST OF OPERATION RELATED PARTS

Parts marked with × are the parts related to operation.

Warning function		Intelligent Key	Key slot	Ignition switch	Door switch	Door request switch	Inside key antenna	Outside key antenna	Intelligent Key warning buzzer	Combination meter warning buzzer	CAN communication system	BCM	Combination meter display	Key slot illumination	Park position switch	"KEY" warning lamp
Intelligent Key system malfunction											×	×				×
OFF position warning	For internal				×					×	×	×				
	For external				×				×			×				
P position warning				×						×	×	×	×		×	
ACC warning				×						×	×	×	×		×	

Warning function		Intelligent Key	Key slot	Ignition switch	Door switch	Door request switch	Inside key antenna	Outside key antenna	Intelligent Key warning buzzer	Combination meter warning buzzer	CAN communication system	BCM	Combination meter display	Key slot illumination	Park position switch	"KEY" warning lamp
Take away warning	Door is open or close	×			×		×		×	×	×	×	×	×		
	Door is open	×			×		×				×	×	×	×		
	Push-ignition switch operation	×		×			×			×	×	×	×	×		
	Intelligent Key is removed from key slot	×	×				×				×	×	×	×		
Door lock operation warning		×	×		×	×	×	×	×			×				
Key ID warning		×	×	×			×				×	×	×			
Key warning		×	×		×					×	×	×	×	×		
Intelligent Key insert information		×	×	×	×		×				×	×	×	×		
Engine start information	Ignition switch is in the ON position	×	×	×			×				×	×	×		×	
	Ignition switch is in any position except the ON position	×	×	×			×				×	×	×			
Steering lock information				×							×	×	×			
Intelligent Key low battery warning		×					×				×	×	×			

WARNING FUNCTION : Component Parts Location

INFOID:0000000003841724

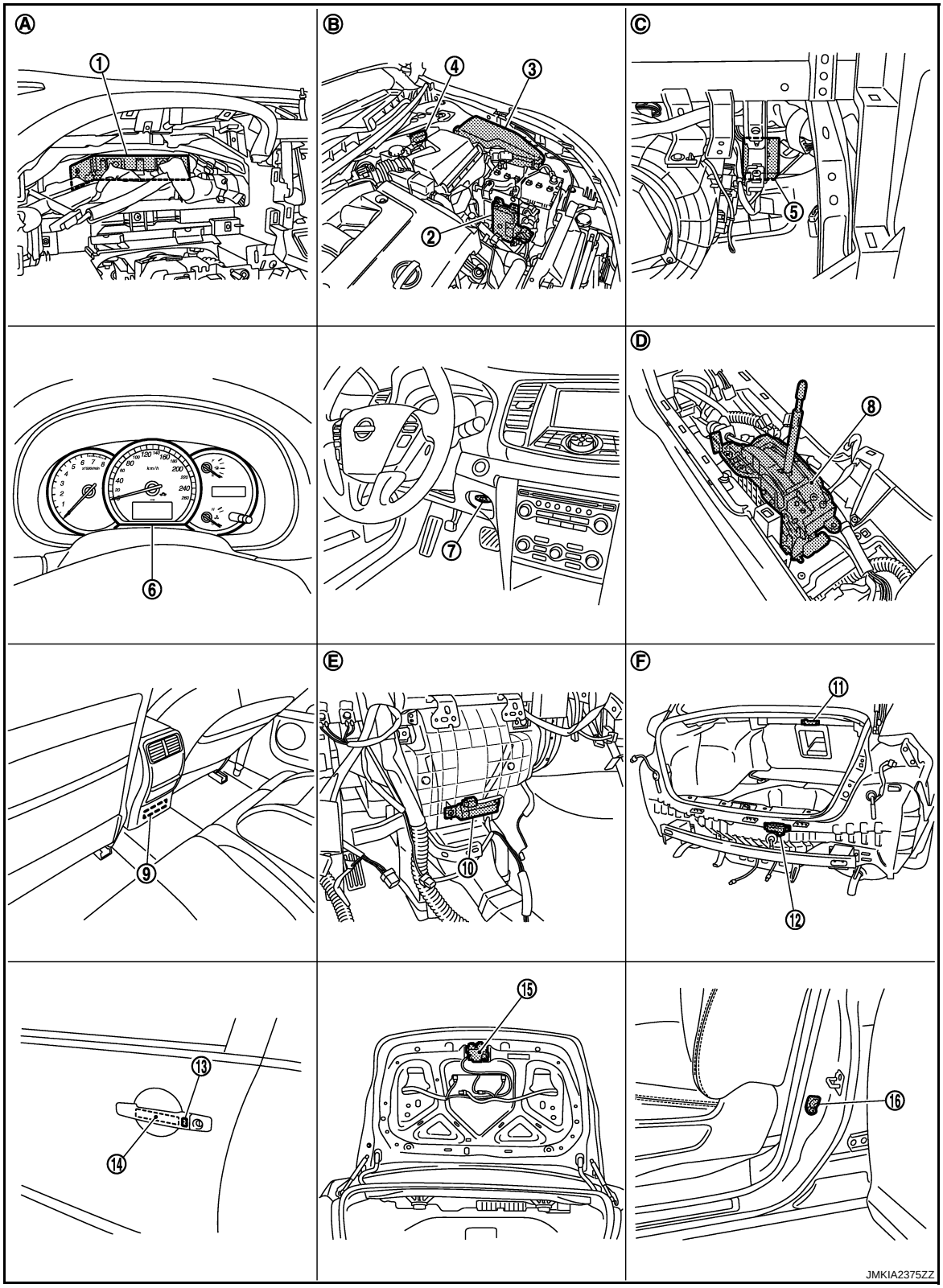

1. BCM M118, M119, M120, M121, M122, M123
2. TCM F23
3. IPDM E/R E10, E11
4. Intelligent Key warning buzzer E25
5. Remote keyless entry receiver M78
6. Combination meter M34
7. Key slot M99
8. Control device (detention switch) M57
9. Inside key antenna (console) M262

10. Inside key antenna (instrument center) M105	11. Inside key antenna (trunk room) B86	12. Outside key antenna (rear bumper) D85
13. Front outside handle LH (request switch) D11	14. Front outside handle LH (outside key antenna) D12	15. Trunk lid lock assembly (trunk lid opener actuator) T5
16. Front door switch (driver side) B34		
A. Behind the combination meter	B. Engine room (LH)	C. Behind the instrument lower panel RH
D. Behind the center console	E. Behind the audio unit	F. View with rear bumper removed

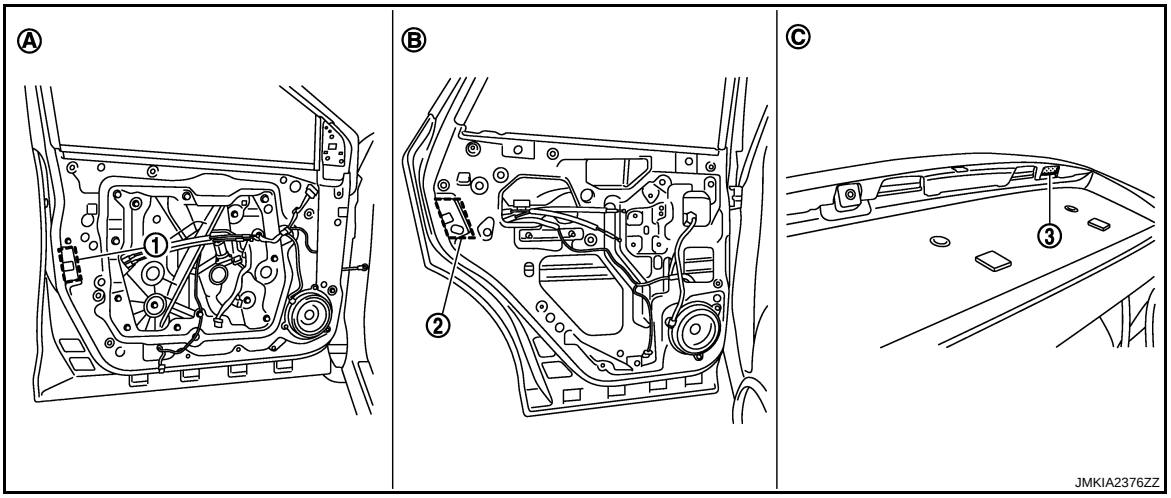

1. Front door lock assembly (driver side) D9	2. Rear door lock assembly LH D85	3. Trunk lid opener request switch T6
A. View with front door finisher removed	B. View with rear door finisher removed	C. View with trunk lid

TRUNK OPEN FUNCTION

System Diagram

INFOID:0000000003853925

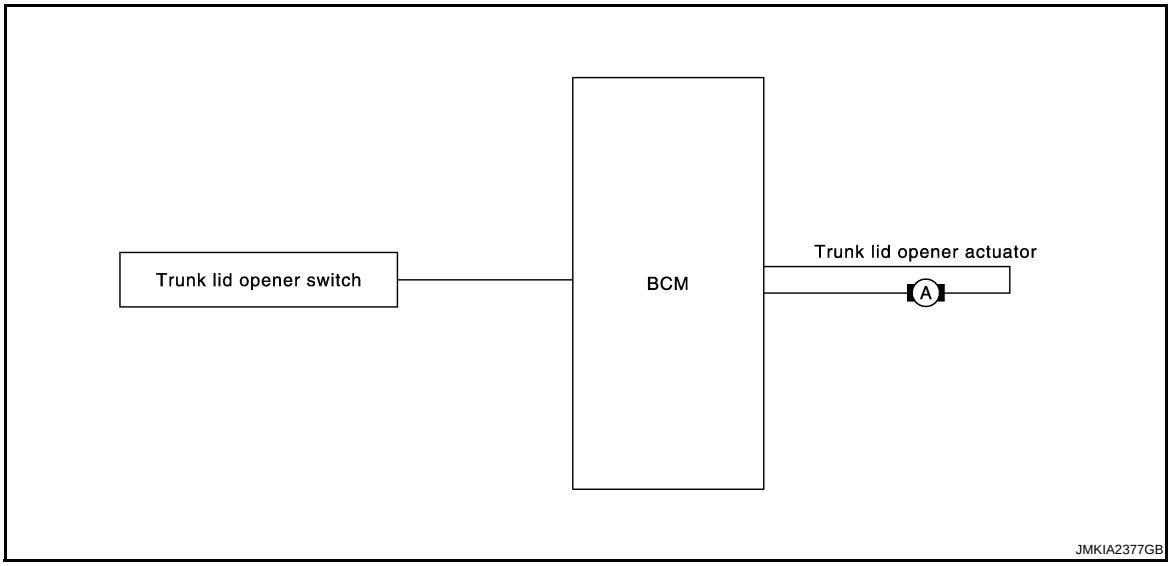

System Description

INFOID:0000000003853926

TRUNK LID OPENER OPERATION

When trunk lid opener switch is ON, BCM opens trunk opener actuator.
BCM can open trunk lid opener actuator when
- vehicle speed is less than 5 km/h (3MPH)
- vehicle security system is in the disarmed or pre-armed phase

BCM does not open trunk lid opener actuator when
- vehicle speed is more than 5 km/h (3MPH)
- vehicle security system is in the armed or alarm phase
- Intelligent Key is inserted in key slot

Component Parts Location

INFOID:0000000003853927

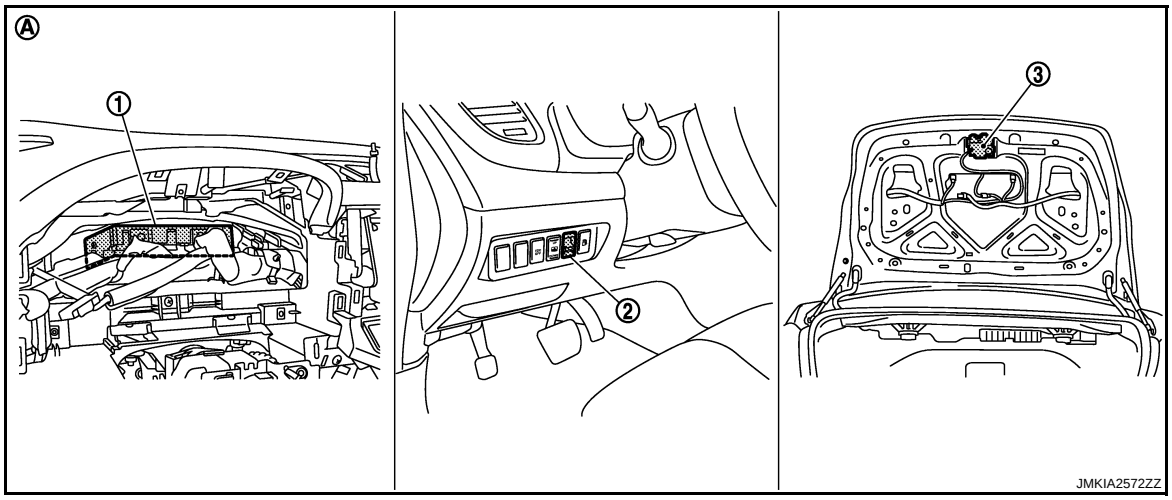

1. BCM M118, M119, M120, M121, M122
2. Trunk lid opener switch M25
3. Trunk lid lock assembly (trunk lid opener actuator) T5

A. Behind the combination meter

Component Description

INFOID:0000000003853928

Item	Function
BCM	Controls trunk lid open operation.
Trunk lid opener switch	Transmits trunk open operation to BCM.
Trunk lid lock assembly (trunk lid opener actuator)	Opens the trunk with the open signal from BCM

FUEL FILLER LID OPENER

Component Parts Location

INFOID:0000000003794762

1. Fuel lid opener switch M108
2. Fuel lid opener actuator B58

DIAGNOSIS SYSTEM (BCM)

COMMON ITEM

COMMON ITEM : CONSULT-III Function (BCM - COMMON ITEM)

INFOID:0000000003941328

APPLICATION ITEM

CONSULT-III performs the following functions via CAN communication with BCM.

Diagnosis mode	Function Description
Work Support	Changes the setting for each system function.
Self Diagnostic Result	Displays the diagnosis results judged by BCM.
CAN Diag Support Monitor	Monitors the reception status of CAN communication viewed from BCM. Refer to CONSULT-III operation manual.
Data Monitor	The BCM input/output signals are displayed.
Active Test	The signals used to activate each device are forcibly supplied from BCM.
Ecu Identification	The BCM part number is displayed.
Configuration	• Read and save the vehicle specification. • Write the vehicle specification when replacing BCM.

SYSTEM APPLICATION

BCM can perform the following functions for each system.

NOTE:

It can perform the diagnosis modes except the following for all sub system selection items.

×: Applicable item

System	Sub system selection item	Diagnosis mode		
		Work Support	Data Monitor	Active Test
Door lock	DOOR LOCK	×	×	×
Rear window defogger	REAR DEFOGGER		×	×
Warning chime	BUZZER		×	×
Interior room lamp timer	INT LAMP	×	×	×
Exterior lamp	HEAD LAMP	×	×	×
Wiper and washer	WIPER	×	×	×
Turn signal and hazard warning lamps	FLASHER	×	×	×
—	AIR CONDITONER*			
• Intelligent Key system • Engine start system	INTELLIGENT KEY	×	×	×
Combination switch	COMB SW		×	
Body control system	BCM	×		
NVIS - NATS	IMMU		×	×
Interior room lamp battery saver	BATTERY SAVER	×	×	×
Trunk lid opener system	TRUNK		×	×
Vehicle security system	THEFT ALM	×	×	×
—	RETAINED PWR*		×	
Signal buffer system	SIGNAL BUFFER		×	×
—	TPMS (AIR PRESSURE MONITOR)*	×	×	×

NOTE:

*: This item is displayed, but is not used.

FREEZE FRAME DATA (FFD) AND IGN COUNTER

Freeze Frame Data

The BCM records the following condition at the moment a particular DTC is detected.
- Vehicle Speed
- Odo/Trip Meter
- Vehicle Condition (BCM detected condition)

CONSULT screen terms	Description
SLEEP>LOCK	While turning BCM status from low power consumption mode to normal mode (Power supply position is “LOCK”.)
SLEEP>OFF	While turning BCM status from low power consumption mode to normal mode (Power supply position is “OFF”.)
LOCK>ACC	While turning power supply position from “LOCK” to “ACC”
ACC>ON	While turning power supply position from “ACC” to “IGN”
RUN>ACC	While turning power supply position from “RUN” to “ACC” (Vehicle is stopping and selector lever is except P position.)
CRANK>RUN	While turning power supply position from “CRANKING” to “RUN” (From cranking up the engine to run it)
RUN>URGENT	While turning power supply position from “RUN“ to “ACC” (Emergency stop operation)
ACC>OFF	While turning power supply position from “ACC” to “OFF”
OFF>LOCK	While turning power supply position from “OFF” to “LOCK”
OFF>ACC	While turning power supply position from “OFF” to “ACC”
ON>CRANK	While turning power supply position from “IGN” to “CRANKING”
OFF>SLEEP	While turning BCM status from normal mode (Power supply position is “OFF”.) to low power consumption mode
LOCK>SLEEP	While turning BCM status from normal mode (Power supply position is “LOCK”.) to low power consumption mode
LOCK	Power supply position is “LOCK” (Ignition switch OFF with steering is locked.)
OFF	Power supply position is “OFF” (Ignition switch OFF with steering is unlocked.)
ACC	Power supply position is “ACC” (Ignition switch ACC)
ON	Power supply position is “IGN” (Ignition switch ON with engine stopped)
ENGINE RUN	Power supply position is “RUN” (Ignition switch ON with engine running)
CRANKING	Power supply position is “CRANKING” (At engine cranking)

IGN Counter
IGN counter indicates the number of times that ignition switch is turned ON after DTC is detected.
- The number is 0 when a malfunction is detected now.
- The number increases like 1 → 2 → 3...38 → 39 after returning to the normal condition whenever ignition switch OFF → ON.
- The number is fixed to 39 until the self-diagnosis results are erased if it is over 39.

DOOR LOCK

DOOR LOCK : CONSULT-III Function (BCM - DOOR LOCK)

INFOID:0000000003794765

BCM CONSULT-III FUNCTION

CONSULT-III performs the following functions via CAN communication with BCM.

Diagnosis mode	Function Description
WORK SUPPORT	Changes the setting for each system function.
DATA MONITOR	The BCM input/output signals are displayed.
ACTIVE TEST	The signals used to activate each device are forcibly supplied from BCM.

WORK SUPPORT

Monitor item	Description
DOOR LOCK-UNLOCK SET	Selective unlock function mode can be changed to operate (WITH) or not operate (WITHOUT) with this mode.

DATA MONITOR

Monitor Item	Contents
REQ SW-DR	Indicates [ON/OFF] condition of door request switch (driver side).
REQ SW-AS	Indicates [ON/OFF] condition of door request switch (passenger side).
REQ SW-BD/TR	Indicates [ON/OFF] condition of trunk lid opener request switch.
DOOR SW-DR	Indicates [ON/OFF] condition of front door switch (driver side).
DOOR SW-AS	Indicates [ON/OFF] condition of front door switch (passenger side).
DOOR SW-RR	Indicates [ON/OFF] condition of rear door switch RH.
DOOR SW-RL	Indicates [ON/OFF] condition of rear door switch LH.
DOOR SW-BK	**NOTE:** This item is displayed, but cannot be monitored.
CDL LOCK SW	Indicates [ON/OFF] condition of lock signal from door lock unlock switch.
CDL UNLOCK SW	Indicates [ON/OFF] condition of unlock signal from door lock unlock switch.
KEY CYL LK-SW	Indicates [ON/OFF] condition of lock signal from door key cylinder.
KEY CYL UN-SW	Indicates [ON/OFF] condition of unlock signal from door key cylinder.

ACTIVE TEST

Test item	Description
DOOR LOCK	This test is able to check door lock/unlock operation. • The all door lock actuators are locked when “ALL LCK” on CONSULT-III screen is touched. • The all door lock actuators are unlocked when “ALL UNLK” on CONSULT-III screen is touched. • The door lock actuator (driver side) is unlocked when “DR UNLK” on CONSULT-III screen is touched. • The door lock actuator (passenger side) is unlocked when “AS UNLK” on CONSULT- III screen is touched. • The door lock actuator (rear LH and RH) is unlocked when “OTR ULK” on CONSULT-III screen is touched.

INTELLIGENT KEY

INTELLIGENT KEY : CONSULT-III Function (BCM - INTELLIGENT KEY)

INFOID:0000000003887872

BCM CONSULT-III FUNCTION

CONSULT-III performs the following functions via CAN communication with BCM.

Diagnosis mode	Function Description
WORK SUPPORT	Changes the setting for each system function.
SELF-DIAG RESULTS	Displays the diagnosis results judged by BCM.
DATA MONITOR	The BCM input/output signals are displayed.
ACTIVE TEST	The signals used to activate each device are forcibly supplied from BCM.

WORK SUPPORT

Monitor item	Description
REMO CONT ID CONFIR	It can be checked whether Intelligent Key ID code is registered or not in this mode.
AUTO LOCK SET	Auto door lock time can be changed in this mode. • MODE 1: 1 minute • MODE 2: 5 minutes • MODE 3: 30 seconds • MODE 4: 2 minutes
LOCK/UNLOCK BY I-KEY	Door lock/unlock function by door request switch (driver side and passenger side) mode can be changed to operate (WITH) or not operate (WITHOUT) in this mode.
ENGINE START BY I-KEY	Engine start function mode can be changed to operate (WITH) or not operate (WITHOUT) in this mode.
TRUNK/GLASS HATCH OPEN	Buzzer reminder function mode by trunk lid opener request switch can be changed to operate (WITH) or not operate (WITHOUT) in this mode.
PANIC ALARM SET	**NOTE:** This item is displayed, but cannot be used.
PW DOWN SET	**NOTE:** This item is displayed, but cannot be used.
TRUNK OPEN DELAY	Trunk button pressing on Intelligent Key button can be selected as per the following in this mode. • MODE 1: Press and hold • MODE 2: Press twice • MODE 3: Press and hold, or press twice
LO-BATT OF KEY FOB WARN	Intelligent Key low battery warning mode can be changed to operate (WITH) or not operate (WITHOUT) in this mode.
ANTI KEY LOCK IN FUNCTI	Key reminder function mode can be changed to operate (WITH) or not operate (WITHOUT) in this mode.
HAZARD ANSWER BACK	Hazard reminder function mode can be selected from the following in this mode. • LOCK ONLY: Door lock operation only • UNLOCK ONLY: Door unlock operation only • LOCK/UNLOCK: Lock/unlock operation • OFF: Non-operational
ANS BACK I-KEY LOCK	Buzzer reminder function (lock operation) mode by door request switch (driver side and passenger side) can be selected from the following is this mode. • Horn chirp: Sound horn • Buzzer: Sound Intelligent Key warning buzzer • OFF: Non-operational
ANS BACK I-KEY UNLOCK	Buzzer reminder function (unlock operation) mode by door request switch can be changed to operate (ON) or not operate (OFF) in this mode.
SHORT CRANKING OUTPUT	Starter motor can operate during the times below. • 70 msec • 100 msec • 200 msec
INSIDE ANT DIAGNOSIS	This function allows inside key antenna self-diagnosis.
HORN WITH KEYLESS LOCK	Horn reminder function mode by Intelligent Key button can be changed to operate (ON) or not operate (OFF) in this mode.

SELF-DIAG RESULT

Refer to DLK-153, "DTC Index".

DATA MONITOR

Monitor Item	Condition
REQ SW -DR	Indicates [ON/OFF] condition of door request switch (driver side).
REQ SW -AS	Indicates [ON/OFF] condition of door request switch (passenger side).
REQ SW -BD/TR	Indicates [ON/OFF] condition of trunk lid opener request switch.
PUSH SW	Indicates [ON/OFF] condition of push-button ignition switch.
IGN RLY2 -F/B	Indicates [ON/OFF] condition of ignition relay 2.

Monitor Item	Condition
CLUCH SW	**NOTE:** This item is displayed, but cannot be monitored.
BRAKE SW 1	Indicates [ON/OFF] condition of brake switch.
DETE/CANCL SW	Indicates [ON/OFF] condition of the P position.
SFT PN/N SW	Indicates [ON/OFF] condition of the P or N position.
S/L -LOCK	Indicates [ON/OFF] condition of steering lock unit (LOCK).
S/L -UNLOCK	Indicates [ON/OFF] condition of steering lock unit (UNLOCK).
S/L RELAY -F/B	Indicates [ON/OFF] condition of steering lock relay.
UNLK SEN -DR	Indicates [ON/OFF] condition of driver door UNLOCK status.
PUSH SW -IPDM	Indicates [ON/OFF] condition of push-button ignition switch.
IGN RLY1 -F/B	Indicates [ON/OFF] condition of ignition relay 1.
DETE SW -IPDM	Indicates [ON/OFF] condition of the P position.
SFT PN -IPDM	Indicates [ON/OFF] condition of the P or N position.
SFT P -MET	Indicates [ON/OFF] condition of the P position.
SFT N -MET	Indicates [ON/OFF] condition of the N position.
ENGINE STATE	Indicates [STOP/STALL/CRANK/RUN] condition of engine states.
S/L LOCK-IPDM	Indicates [ON/OFF] condition of steering lock unit (LOCK).
S/L UNLK-IPDM	Indicates [ON/OFF] condition of steering lock unit (UNLOCK).
S/L RELAY-REQ	Indicates [ON/OFF] condition of steering lock relay.
VEH SPEED 1	Displays the vehicle speed signal received from combination meter by numerical value [Km/h].
VEH SPEED 2	Displays the vehicle speed signal received from ABS, VDC or CVT by numerical value [Km/h].
DOOR STAT-DR	Indicates [LOCK/READY/UNLK] condition of driver side door status.
DOOR STAT-AS	Indicates [LOCK/READY/UNLK] condition of passenger side door status.
ID OK FLAG	Indicates [SET/RESET] condition of key ID.
PRMT ENG STRT	Indicates [SET/RESET] condition of engine start possibility.
PRMT RKE STRT	**NOTE:** This item is displayed, but cannot be monitored.
KEY SW -SLOT	Indicates [ON/OFF] condition of key slot.
TRNK/HAT MNTR	Indicates [ON/OFF] condition of trunk lid.
RKE-LOCK	Indicates [ON/OFF] condition of LOCK signal from Intelligent Key.
RKE-UNLOCK	Indicates [ON/OFF] condition of UNLOCK signal from Intelligent Key.
RKE-TR/BD	Indicates [ON/OFF] condition of TRUNK OPEN signal from Intelligent Key.
RKE-PANIC	**NOTE:** This item is displayed, but cannot be monitored.
RKE-P/W OPEN	**NOTE:** This item is displayed, but cannot be monitored.
RKE-MODE CHG	Indicates [ON/OFF] condition of MODE CHANGE signal from Intelligent Key.
RKE OPE COUN1	When remote keyless entry receiver receives the signal transmitted while operating on Intelligent Key, the numerical values start changing.
RKE OPE COUN2	**NOTE:** This item is displayed, but cannot be monitored.

ACTIVE TEST

Test item	Description
BATTERY SAVER	This test is able to check interior room lamp operation. The interior room lamp will be activated when “ON” on CONSULT-III screen is touched.
PW REMOTO DOWN SET	**NOTE:** This item is displayed, but cannot be used.
OUTSIDE BUZZER	This test is able to check Intelligent Key warning buzzer operation. The Intelligent Key warning buzzer will be activated when “ON” on CONSULT-III screen is touched.
INSIDE BUZZER	This test is able to check warning chime in combination meter operation. • Take away warning chime sounds when “TAKE OUT” on CONSULT-III screen is touched. • Key warning chime sounds when “KEY” on CONSULT-III screen is touched. • P position warning chime sounds when “KNOB” on CONSULT-III screen is touched.
INDICATOR	This test is able to check warning lamp operation. • “KEY” Warning lamp illuminates when “RED ON” on CONSULT-III screen is touched. • “KEY” Warning lamp blinks when “RED IND” on CONSULT-III screen is touched.
INT LAMP	This test is able to check interior room lamp operation. The interior room lamp will be activated when “ON” on CONSULT-III screen is touched.
LCD	This test is able to check meter display information • Engine start information displays when “BP N” on CONSULT-III screen is touched. • Engine start information displays when “BP I” on CONSULT-III screen is touched. • Key ID warning displays when “ID NG” on CONSULT-III screen is touched. • Steering lock information displays when “ROTAT” on CONSULT-III screen is touched. • P position warning displays when “SFT P” on CONSULT-III screen is touched. • Intelligent Key insert information displays when “INSRT” on CONSULT-III screen is touched. • Intelligent Key low battery warning displays when “BATT” on CONSULT-III screen is touched. • Take away warning displays when “OUTKEY” on CONSULT-III screen is touched. • OFF position warning displays when “LK WN” on CONSULT-III screen is touched.
TRUNK/GLASS HATCH	This test is able to check trunk lid opener actuator open operation. This actuator opens when “OPEN” on CONSULT-III screen is touched.
FLASHER	This test is able to check security hazard lamp operation. The hazard lamps will be activated when “RH” or “LH”on CONSULT-III screen is touched.
HORN	This test is able to check horn operation. The horn will be activated when “ON” on CONSULT-III screen is touched.
P RANGE	This test is able to check control device power supply Control device power is supplied when “ON” on CONSULT-III screen is touched.
ENGINE SW ILLUMI	This test is able to check push-ignition switch illumination operation. Push-ignition switch illumination illuminates when “ON” on CONSULT-III screen is touched.
LOCK INDICATOR	This test is able to check LOCK indicator in push-ignition switch operation. LOCK indicator in push-ignition switch illuminates when “ON” on CONSULT-III screen is touched.
ACC INDICATOR	This test is able to check ACC indicator in push-ignition switch operation. ACC indicator in push-ignition switch illuminates when “ON” on CONSULT-III screen is touched.
IGNITION ON IND	This test is able to check ON indicator in push-ignition switch operation. ON indicator in push-ignition switch illuminates when “ON” on CONSULT-III screen is touched.
KEY SLOT ILLUMI	This test is able to check key slot illumination operation. Key slot illumination illuminates when “ON” on CONSULT-III screen is touched.
TRUNK/BACK DOOR	This test is able to check trunk lid opener actuator open operation. This actuator opens when “OPEN” on CONSULT-III screen is touched.

TRUNK

TRUNK : CONSULT-III Function (BCM - TRUNK)

INFOID:0000000003794767

BCM CONSULT-III FUNCTION

CONSULT-III performs the following functions via CAN communication with BCM.

Diagnosis mode	Function Description
DATA MONITOR	The BCM input/output signals are displayed.
ACTIVE TEST	The signals used to activate each device are forcibly supplied from BCM.

DATA MONITOR

Monitor Item	Contents
PUSH SW	Indicates [ON/OFF] condition of push-button ignition switch.
UNLK SEN -DR	**NOTE:** This item is displayed, but cannot be monitored.
VEH SPEED 1	Indicates [km/h] condition of vehicle speed signal from combination meter.
KEY CYL SW-TR	**NOTE:** This item is displayed, but cannot be monitored.
TR CANCEL SW	**NOTE:** This item is displayed, but cannot be monitored.
TR/BD OPEN SW	Indicates [ON/OFF] condition of trunk lid opener switch.
TRNK/HAT MNTR	**NOTE:** This item is displayed, but cannot be monitored.
RKE-TR/BD	**NOTE:** This item is displayed, but cannot be monitored.

ACTIVE TEST

Test item	Description
TRUNK/GLASS HATCH	This test is able to check trunk lid opener actuator open operation.

COMPONENT DIAGNOSIS

U1000 CAN COMM CIRCUIT

BCM

BCM : Description

INFOID:0000000003794769

CAN (Controller Area Network) is a serial communication line for real time applications. It is an on-vehicle multiplex communication line with high data communication speed and excellent error detectability. Modern vehicles are equipped with many electronic control units, and each control unit shares information and links with other control units during operation (not independent). In CAN communication, control units are connected with 2 communication lines (CAN H-line, CAN L-line) allowing a high rate of information transmission with less wiring. Each control unit transmits/receives data but selectively reads required data only.
CAN Communication Signal Chart. Refer to LAN-22, "CAN Communication Signal Chart".

BCM : DTC Logic

INFOID:0000000003794770

DTC DETECTION LOGIC

DTC No.	Trouble diagnosis name	DTC detecting condition	Possible cause
U1000	CAN COMM CIRCUIT	When BCM cannot communicate CAN communication signal continuously for 2 seconds or more.	CAN communication system

BCM : Diagnosis Procedure

INFOID:0000000003794771

1. PERFORM SELF DIAGNOSTIC

1. Turn ignition switch ON and wait for 3 seconds or more.
2. Check “Self Diagnostic Result”.

Is “CAN COMM CIRCUIT” displayed?

YES >> Refer to LAN-14, "Trouble Diagnosis Flow Chart".
NO >> Refer to GI-35, "Intermittent Incident".

U1010 CONTROL UNIT (CAN)

BCM

BCM : DTC Logic

INFOID:0000000003794775

DTC DETECTION LOGIC

DTC No.	Trouble diagnosis name	DTC detecting condition	Possible cause
U1010	CONTROL UNIT (CAN)	BCM detected internal CAN communication circuit malfunction.	BCM

BCM : Diagnosis Procedure

INFOID:0000000003794776

1. REPLACE BCM

When DTC [U1010] is detected, replace BCM.

>> Replace BCM. Refer to BCS-78, "Removal and Installation"

BCM : Special Repair Requirement

INFOID:0000000003794777

1. REQUIRED WORK WHEN REPLACING BCM

Initialize control unit. Refer to CONSULT-III operation manual NATS-IVIS/NVIS.

>> Work end.

B2621 INSIDE KEY ANTENNA 1

Description

INFOID:0000000003794823

Detects whether Intelligent Key is inside the vehicle.
Installed in the instrument center.

DTC Logic

INFOID:0000000003794824

DTC DETECTION LOGIC

DTC No.	Trouble diagnosis name	DTC detecting condition	Possible cause
B2621	INSIDE ANTENNA 1 CIRCUIT	An excessive high or low voltage from inside antenna is sent to BCM.	• Inside key antenna (instrument center) • Between BCM and Inside key antenna (instrument center)

DTC CONFIRMATION PROCEDURE

1. PERFORM DTC CONFIRMATION PROCEDURE

With CONSULT-III

1. Perform inside key antenna (“INSIDE ANT DIAGNOSIS”) on Work Support” in “INTELLIGENT KEY”.
2. Perform “INTELLIGENT KEY” Self Diagnostic Result.

Is inside key antenna DTC detected?

YES >> Refer to DLK-50, "Diagnosis Procedure".
NO >> Inside key antenna (instrument center) is OK.

Diagnosis Procedure

INFOID:0000000003794825

1. CHECK INSIDE KEY ANTENNA INPUT SIGNAL 1

1. Turn ignition switch OFF.
2. Check signal between BCM harness connector and ground with oscilloscope.

(+) BCM Connector	(+) BCM Terminal	(–)	Condition	Signal (Reference value.)
M122	78, 79	Ground	Place Intelligent Key inside the vehicle.	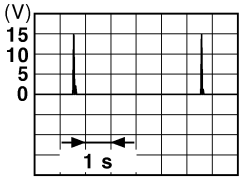 JMKIA0062GB
			Place Intelligent Key outside the vehicle.	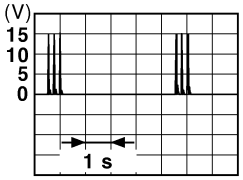 JMKIA0063GB

Is the inspection result normal?

YES >> GO TO 4.
NO >> GO TO 2.

2. CHECK INSIDE KEY ANTENNA CIRCUIT

1. Disconnect BCM and inside key antenna connector (instrument center).
2. Check continuity between BCM harness connector and inside key antenna (instrument center) harness connector.

BCM		Inside key antenna (instrument center)		Continuity
Connector	Terminal	Connector	Terminal	
M122	78	M105	2	Existed
	79		1	

3. Check continuity between BCM harness connector and ground.

BCM		Ground	Continuity
Connector	Terminal		
M122	78		Not existed
	79		

Is the inspection result normal?

YES >> GO TO 3.
NO >> Repair or replace harness.

3. CHECK INSIDE KEY ANTENNA INPUT SIGNAL 2

1. Replace inside key antenna (instrument center). (New antenna or other antenna)
2. Connect BCM and inside key antenna (instrument center) connector.
3. Check signal between BCM harness connector and ground with oscilloscope.

(+) BCM Connector	(+) BCM Terminal	(–)	Condition	Signal (Reference value.)
M122	78, 79	Ground	Place Intelligent Key inside the vehicle.	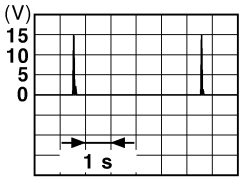 JMKIA0062GB
			Place Intelligent Key outside the vehicle.	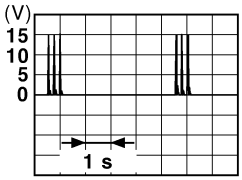 JMKIA0063GB

Is the inspection result normal?

YES >> Replace inside key antenna (instrument center). Refer to DLK-235, "INSTRUMENT CENTER : Removal and Installation".
NO >> Replace BCM. Refer to BCS-78, "Removal and Installation".

4. CHECK INTERMITTENT INCIDENT

Refer to GI-35, "Intermittent Incident".

>> INSPECTION END

B2622 INSIDE KEY ANTENNA 2

Description

INFOID:0000000003794826

Detects whether Intelligent Key is inside the vehicle.
Installed in the console.

DTC Logic

INFOID:0000000003794827

DTC DETECTION LOGIC

DTC No.	Trouble diagnosis name	DTC detecting condition	Possible cause
B2622	INSIDE ANTENNA 2 CIRCUIT	An excessive high or low voltage from inside antenna is sent to BCM.	• Inside key antenna (console) • Between BCM and Inside key antenna (console)

DTC CONFIRMATION PROCEDURE

1. PERFORM DTC CONFIRMATION PROCEDURE

With CONSULT-III

1. Perform inside key antenna (“INSIDE ANT DIAGNOSIS”) on “Work Support” in “INTELLIGENT KEY”.
2. Perform “INTELLIGENT KEY” Self Diagnostic Result.

Is inside key antenna DTC detected?

YES >> Refer to DLK-52, "Diagnosis Procedure".
NO >> Inside key antenna (console) is OK.

Diagnosis Procedure

INFOID:0000000003794828

1. CHECK INSIDE KEY ANTENNA INPUT SIGNAL 1

1. Turn ignition switch OFF.
2. Check signal between BCM harness connector and ground with oscilloscope.

(+) BCM Connector	(+) BCM Terminal	(–)	Condition	Signal (Reference value.)
M122	72, 73	Ground	Place Intelligent Key inside the vehicle.	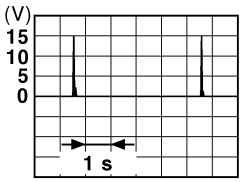 JMKIA0062GB
			Place Intelligent Key outside the vehicle.	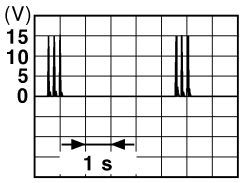 JMKIA0063GB

Is the inspection result normal?

YES >> GO TO 4.
NO >> GO TO 2.

2. CHECK INSIDE KEY ANTENNA CIRCUIT

1. Disconnect BCM and inside key antenna (console) connector.

2. Check continuity between BCM harness connector and inside key antenna (console) harness connector.

BCM		Inside key antenna (console)		Continuity
Connector	Terminal	Connector	Terminal	
M122	72	M262	2	Existed
	73		1	

3. Check continuity between BCM harness connector and ground.

BCM		Ground	Continuity
Connector	Terminal		
M122	72		Not existed
	73		

Is the inspection result normal?

YES >> GO TO 3.
NO >> Repair or replace harness.

3. CHECK INSIDE KEY ANTENNA INPUT SIGNAL 2

1. Replace inside key antenna (console). (New antenna or other antenna)
2. Connect BCM and inside key antenna (console) connector.
3. Check signal between BCM harness connector and ground with oscilloscope.

(+) BCM Connector	(+) BCM Terminal	(–)	Condition	Signal (Reference value.)
M122	72, 73	Ground	Place Intelligent Key inside the vehicle.	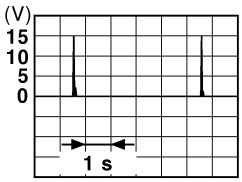 JMKIA0062GB
			Place Intelligent Key outside the vehicle.	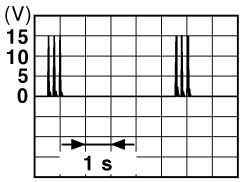 JMKIA0063GB

Is the inspection result normal?

YES >> Replace inside key antenna (console). Refer to DLK-236, "CONSOLE : Removal and Installation".
NO >> Replace BCM. Refer to BCS-78, "Removal and Installation".

4. CHECK INTERMITTENT INCIDENT

Refer to GI-35, "Intermittent Incident".

>> INSPECTION END

B2623 INSIDE KEY ANTENNA 3

Description

INFOID:0000000003794829

Detects whether Intelligent Key is inside the vehicle.
Installed in the trunk room.

DTC Logic

INFOID:0000000003794830

DTC DETECTION LOGIC

DTC No.	Trouble diagnosis name	DTC detecting condition	Possible cause
B2623	INSIDE ANTENNA 3 CIRCUIT	An excessive high or low voltage from inside antenna is sent to BCM.	• Inside key antenna (trunk room) • Between BCM and Inside key antenna (trunk room)

DTC CONFIRMATION PROCEDURE

1. PERFORM DTC CONFIRMATION PROCEDURE

With CONSULT-III

1. Perform inside key antenna (“INSIDE ANT DIAGNOSIS”) on “Work Support” in “INTELLIGENT KEY”.
2. Perform “INTELLIGENT KEY” Self Diagnostic Result.

Is inside key antenna DTC detected?

YES >> Refer to DLK-54, "Diagnosis Procedure".
NO >> Inside key antenna (trunk room) is OK.

Diagnosis Procedure

INFOID:0000000003794831

1. CHECK INSIDE KEY ANTENNA INPUT SIGNAL 1

1. Turn ignition switch OFF.
2. Check signal between BCM harness connector and ground with oscilloscope.

(+) BCM Connector	(+) BCM Terminal	(–)	Condition	Signal (Reference value.)
M121	34, 35	Ground	Place Intelligent Key inside the vehicle.	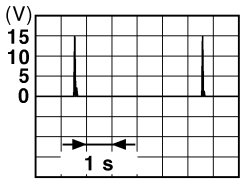 JMKIA0062GB
			Place Intelligent Key outside the vehicle.	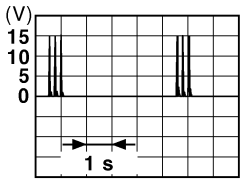 JMKIA0063GB

Is the inspection result normal?

YES >> GO TO 4.
NO >> GO TO 2.

2. CHECK INSIDE KEY ANTENNA CIRCUIT

1. Disconnect BCM and inside key antenna (trunk room) connector.

2. Check continuity between BCM harness connector and inside key antenna (trunk room) harness connector.

BCM		Inside key antenna		Continuity
Connector	Terminal	Connector	Terminal	
M121	34	B86	2	Existed
	35		1	

3. Check continuity between BCM harness connector and ground.

BCM		Ground	Continuity
Connector	Terminal		
M121	34		Not existed
	35		

Is the inspection result normal?

YES >> GO TO 3.
NO >> Repair or replace harness.

3. CHECK INSIDE KEY ANTENNA INPUT SIGNAL 2

1. Replace inside key antenna (trunk room). (New antenna or other antenna)
2. Connect BCM and inside key antenna (trunk room) connector.
3. Check signal between BCM harness connector and ground with oscilloscope.

(+) BCM		(–)	Condition	Signal (Reference value.)
Connector	Terminal			
M121	34, 35	Ground	Place Intelligent Key inside the vehicle.	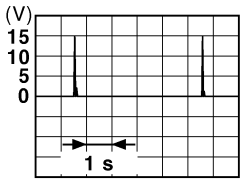 JMKIA0062GB
			Place Intelligent Key outside the vehicle.	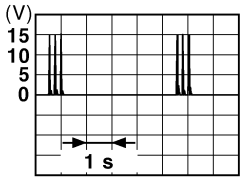 JMKIA0063GB

Is the inspection result normal?

YES >> Replace inside key antenna (trunk room). Refer to DLK-237, "TRUNK ROOM : Removal and Installation".
NO >> Replace BCM. Refer to BCS-78, "Removal and Installation".

4. CHECK INTERMITTENT INCIDENT

Refer to GI-35, "Intermittent Incident".

>> INSPECTION END

POWER SUPPLY AND GROUND CIRCUIT
BCM (BODY CONTROL MODULE)

BCM (BODY CONTROL MODULE) : Diagnosis Procedure

INFOID:0000000003794832

1. CHECK FUSE AND FUSIBLE LINK

1. Turn ignition switch OFF.
2. Check that the following fuse and fusible link are not fusing.

Terminal No.	Signal name	Fuse and fusible link No.
1	Battery power supply	I (40A)
11		10 (10A)

Is the fuse fusing?

YES >> Replace the blown fuse or fusible link after repairing the affected circuit if a fuse or fusible link is blown.
NO >> GO TO 2.

2. CHECK POWER SUPPLY CIRCUIT

1. Disconnect BCM connectors.
2. Check voltage between BCM harness connector and ground.

(+)		(–)	Voltage (Approx.)
BCM			
Connector	Terminal		
M118	1	Ground	Battery voltage
M119	11		

Is the inspection result normal?

YES >> GO TO 3.
NO >> Repair or replace harness.

3. CHECK GROUND CIRCUIT

Check continuity between BCM harness connector and ground.

BCM		Ground	Continuity
Connector	Terminal		
M119	13		Existed

Is the inspection result normal?

YES >> INSPECTION END
NO >> Repair or replace harness.

DOOR SWITCH

Description

INFOID:0000000003794834

Detects door open/close condition.

Component Function Check

INFOID:0000000003794835

1. CHECK FUNCTION

With CONSULT-III

Check door switches (“DOOR SW-DR”, “DOOR SW-AS”, “DOOR SW-RL”, “DOOR SW-RR” and “DOOR SW-BK”) in Data Monitor” mode with CONSULT-III.

Monitor item	Condition
DOOR SW-DR	CLOSE → OPEN: OFF → ON
DOOR SW-AS	
DOOR SW-RL	
DOOR SW-RR	

Is the inspection result normal?

YES >> Door switch is OK.
NO >> Refer to DLK-57, "Diagnosis Procedure".

Diagnosis Procedure

INFOID:0000000003794836

1. CHECK DOOR SWITCH INPUT SIGNAL

1. Turn ignition switch OFF.
2. Disconnect malfunctioning door switch connector.
3. Check signal between malfunctioning door switch harness connector and ground with oscilloscope.

(+)			(–)	Signal (Reference value)
Door switch				
Connector		Terminal		
Driver side	B34	2	Ground	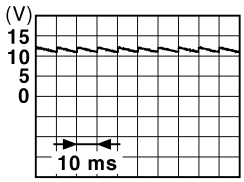 JPMIA0011GB
Passenger side	B220	2		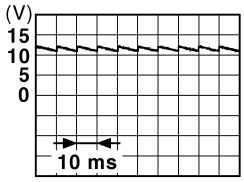 JPMIA0011GB
Rear LH	B71	2		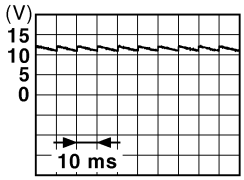 JPMIA0011GB
Rear RH	B221	2		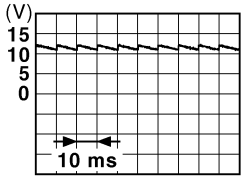 JPMIA0011GB

Is the inspection result normal?

YES >> GO TO 3.
NO >> GO TO 2.

2. CHECK DOOR SWITCH CIRCUIT

1. Disconnect BCM connector.
2. Check continuity between BCM harness connector and door switch harness connector.

BCM		Door switch		Continuity
Connector	Terminal	Connector	Terminal	
M123	150	B34 (Driver side)	2	Existed
	124	B220 (Passenger side)		
M121	69	B71 (Rear LH)		
	68	B221 (Rear RH)		

3. Check continuity between BCM harness connector and ground.

BCM			Continuity
Connector	Terminal		
M123	150 (Driver side)	Ground	Not existed
	124 (Passenger side)		
M121	69 (Rear LH)		
	68 (Rear RH)		

Is the inspection result normal?

YES >> Replace BCM. Refer to BCS-78, "Removal and Installation".
NO >> Repair or replace harness.

3. CHECK DOOR SWITCH

Refer to DLK-59, "Component Inspection".

Is the inspection result normal?

YES >> GO TO 4.
NO >> Replace malfunctioning door switch. Refer to DLK-234, "Removal and Installation".

4. CHECK INTERMITTENT INCIDENT

Refer to GI-35, "Intermittent Incident".

>> INSPECTION END

Component Inspection

INFOID:0000000003896358

1. CHECK DOOR SWITCH

1. Turn ignition switch OFF.
2. Disconnect malfunction front door switch connector.
3. Check front door switch.

(+)			(-)	Condition		Continuity
Door switch						
Connector		Terminal				
Driver side	B34	2	Ground part of front door switch	Door switch	pressed	Not exists
					released	Exists
Passenger side	B220				pressed	Not exists
					released	Exists
Rear LH	B71				pressed	Not exists
					released	Exists
Rear RH	B221				pressed	Not exists
					released	Exists

Is the inspection result normal?

YES >> Door switch is OK.
NO >> Replace malfunctioning door switch. Refer to DLK-234, "Removal and Installation".

DOOR LOCK AND UNLOCK SWITCH

Description

INFOID:0000000003794842

Transmits door lock/unlock operation to BCM.

Component Function Check

INFOID:0000000003794843

1.CHECK FUNCTION

With CONSULT-III

Check (“CDL LOCK SW ”, “CDL UNLOCK SW”) in Data Monitor mode with CONSULT-III.

Monitor item	Condition	
CDL LOCK SW	LOCK	: ON
	UNLOCK	: OFF
CDL UNLOCK SW	LOCK	: OFF
	UNLOCK	: ON

Is the inspection result normal?

YES >> Door lock and unlock switch is OK.
NO >> Refer to DLK-60, "Diagnosis Procedure".

Diagnosis Procedure

INFOID:0000000003794844

1.CHECK POWER WINDOW MAIN SWITCH

1. Turn ignition switch ON.
2. Check door lock and unlock operation.

Is the inspection result normal?

YES >> Replace power window main switch.
NO >> Go to PWC-74, "Diagnosis Procedure".

DOOR LOCK ACTUATOR

DRIVER SIDE

DRIVER SIDE : Description

INFOID:0000000003794848

Locks/unlocks the door with the signal from BCM.

DRIVER SIDE : Component Function Check

INFOID:0000000003794849

1. CHECK FUNCTION

1. Use CONSULT-III to perform Active Test (“DOOR LOCK”).
2. Touch “ALL LCK” or “ALL UNLK” to check that it works normally.

Is the inspection result normal?

YES >> Door lock actuator is OK.
NO >> Refer to DLK-61, "DRIVER SIDE : Diagnosis Procedure".

DRIVER SIDE : Diagnosis Procedure

INFOID:0000000003794850

1. CHECK DOOR LOCK ACTUATOR OUTPUT SIGNAL

1. Turn ignition switch OFF.
2. Disconnect front door lock assembly (driver side) connector.
3. Check voltage between front door lock assembly (driver side) harness connector and ground.

(+)		(–)	Condition		Voltage (V) (Approx.)
Front door lock assembly (driver side)					
Connector	Terminal				
D9	1	Ground	Door lock and unlock switch	LOCK	0 → Battery voltage → 0
	2			UNLOCK	0 → Battery voltage → 0

Is the inspection result normal?

YES >> Replace front door lock assembly (driver side). Refer to DLK-202, "DOOR ASSEMBLY : Removal and Installation".
NO >> GO TO 2.

2. CHECK DOOR LOCK ACTUATOR CIRCUIT

1. Disconnect BCM connector.
2. Check continuity between BCM harness connector and front door lock assembly (driver side) harness connector.

BCM		Front door lock assembly (driver side)		Continuity
Connector	Terminal	Connector	Terminal	
M119	8	D9	1	Existed
	9		2	

3. Check continuity between BCM harness connector and ground.

BCM		Ground	Continuity
Connector	Terminal		
M119	8		Not existed
	9		

Is the inspection result normal?

YES >> Replace BCM. Refer to BCS-78, "Removal and Installation".
NO >> Repair or replace harness.

PASSENGER SIDE

PASSENGER SIDE : Description

INFOID:0000000003794851

Locks/unlocks the door with the signal from BCM.

PASSENGER SIDE : Component Function Check

INFOID:0000000003794852

1. CHECK FUNCTION

1. Use CONSULT-III to perform Active Test (“DOOR LOCK”).
2. Touch “ALL LCK” or “ALL UNLK” to check that it works normally.

Is the inspection result normal?

YES >> Door lock actuator is OK.
NO >> Refer to DLK-62, "PASSENGER SIDE : Diagnosis Procedure".

PASSENGER SIDE : Diagnosis Procedure

INFOID:0000000003794853

1. CHECK DOOR LOCK ACTUATOR OUTPUT SIGNAL

1. Turn ignition switch OFF.
2. Disconnect front door lock assembly (passenger side).
3. Check voltage between front door lock assembly (passenger side) harness connector and ground.

(+)		(–)	Condition		Voltage (V) (Approx.)
Front door lock assembly (passenger side)					
Connector	Terminal				
D48	1	Ground	Door lock and unlock switch	UNLOCK	0 → Battery voltage → 0
	2			LOCK	0 → Battery voltage → 0

Is the inspection result normal?

YES >> Replace front door lock assembly (passenger side). Refer to DLK-222, "DOOR LOCK : Removal and Installation".
NO >> GO TO 2.

2. CHECK DOOR LOCK ACTUATOR CIRCUIT

1. Disconnect BCM connector.
2. Check continuity between BCM harness connector and front door lock assembly (passenger side) harness connector.

BCM		Front door lock assembly (passenger side)		Continuity
Connector	Terminal	Connector	Terminal	
M119	5	D48	1	Existed
	8		2	

3. Check continuity between BCM harness connector and ground.

BCM		Ground	Continuity
Connector	Terminal		
M119	5		Not existed
	8		

Is the inspection result normal?

YES >> Replace BCM. Refer to BCS-78, "Removal and Installation".
NO >> Repair or replace harness.

REAR LH

REAR LH : Description

INFOID:0000000003794854

Locks/unlocks the door with the signal from BCM.

REAR LH : Component Function Check

INFOID:0000000003794855

1. CHECK FUNCTION

1. Use CONSULT-III to perform Active Test (“DOOR LOCK”).
2. Touch “ALL LCK” or “ALL UNLK” to check that it works normally.

Is the inspection result normal?

YES >> Door lock actuator is OK.
NO >> Refer to DLK-63, "REAR LH : Diagnosis Procedure".

REAR LH : Diagnosis Procedure

INFOID:0000000003794856

1. CHECK DOOR LOCK ACTUATOR OUTPUT SIGNAL

1. Turn ignition switch OFF.
2. Disconnect rear door lock assembly LH.
3. Check voltage between rear door lock assembly LH harness connector and ground.

(+)		(–)	Condition		Voltage (V) (Approx.)
Rear door lock assembly LH					
Connector	Terminal				
D85	1	Ground	Door lock and unlock switch	LOCK	0 → Battery voltage → 0
	2			UNLOCK	0 → Battery voltage → 0

Is the inspection result normal?

YES >> Replace rear door lock assembly LH. Refer to DLK-202, "DOOR ASSEMBLY : Removal and Installation".
NO >> GO TO 2.

2. CHECK DOOR LOCK ACTUATOR CIRCUIT

1. Disconnect BCM connector.
2. Check continuity between BCM harness connector and rear door lock assembly LH harness connector.

BCM		Rear door lock assembly LH		Continuity
Connector	Terminal	Connector	Terminal	
M119	8	D85	1	Existed
	10		2	

3. Check continuity between BCM harness connector and ground.

BCM		Ground	Continuity
Connector	Terminal		
M119	8		Not existed
	10		

Is the inspection result normal?

YES >> Replace BCM. Refer to BCS-78, "Removal and Installation".
NO >> Repair or replace harness.

REAR RH

REAR RH : Description

INFOID:0000000003794857

Locks/unlocks the door with the signal from BCM.

REAR RH : Component Function Check

INFOID:0000000003794858

1. CHECK FUNCTION

1. Use CONSULT-III to perform Active Test (“DOOR LOCK”).
2. Touch “ALL LCK” or “ALL UNLK” to check that it works normally.

Is the inspection result normal?

YES >> Door lock actuator is OK.
NO >> Refer to DLK-64, "REAR RH : Diagnosis Procedure".

REAR RH : Diagnosis Procedure

INFOID:0000000003794859

1. CHECK DOOR LOCK ACTUATOR OUTPUT SIGNAL

1. Turn ignition switch OFF.
2. Disconnect rear door lock assembly RH.
3. Check voltage between rear door lock assembly RH harness connector and ground.

(+)		(–)	Condition of door lock and unlock switch	Voltage (V) (Approx.)
Rear door lock assembly RH				
Connector	Terminal			
D105	1	Ground	UNLOCK	0 → Battery voltage → 0
	2		LOCK	0 → Battery voltage → 0

Is the inspection result normal?

YES >> Replace rear door lock assembly RH. Refer to DLK-208, "DOOR ASSEMBLY : Removal and Installation".
NO >> GO TO 2.

2. CHECK DOOR LOCK ACTUATOR CIRCUIT

1. Disconnect BCM connector.
2. Check continuity between BCM harness connector and rear door lock assembly RH harness connector.

BCM		Rear door lock assembly RH		Continuity
Connector	Terminal	Connector	Terminal	
M119	8	D105	2	Existed
	10		1	

3. Check continuity between BCM harness connector and ground.

BCM		Ground	Continuity
Connector	Terminal		
M119	8		Not Existed
	10		

Is the inspection result normal?

YES >> Replace BCM. Refer to BCS-78, "Removal and Installation".
NO >> Repair or replace harness.

TRUNK LID OPENER ACTUATOR

Description

INFOID:0000000003794860

Trunk lid opener actuator open trunk lid from BCM.

Component Function Check

INFOID:0000000003794861

1. CHECK FUNCTION

1. Perform Active Test (“TRUNK/GLASS HATCH”) with CONSULT-III.
2. Touch “OPEN” and check that trunk lid opens.

Is the inspection result normal?

YES >> Trunk lid opener actuator is OK.
NO >> Refer to DLK-65, "Diagnosis Procedure".

Diagnosis Procedure

INFOID:0000000003794862

1. CHECK TRUNK LID OPENER INPUT SIGNAL

1. Turn ignition switch OFF.
2. Disconnect trunk lid lock assembly.
3. Check voltage between trunk lid lock assembly harness connector and ground.

(+)		(–)	Condition	Voltage (V) (Approx.)
Trunk lid lock assembly (trunk lid opener actuator)				
Connector	Terminal			
T5	2	Ground	Trunk lid opener switch is ON	0 → Battery voltage → 0

Is the inspection result normal?

YES >> GO TO 3.
NO >> GO TO 2.

2. CHECK TRUNK LID OPENER ACTUATOR CIRCUIT

1. Disconnect BCM connector.
2. Check continuity between BCM harness connector and trunk lid lock assembly (trunk lid opener actuator) harness connector.

BCM		Trunk lid lock assembly (trunk lid opener actuator)		Continuity
Connector	Terminal	Connector	Terminal	
M120	23	T5	2	Existed

3. Check continuity between BCM harness connector and ground.

BCM		Ground	Continuity
Connector	Terminal		
M120	23		Not existed

Is the inspection result normal?

YES >> Replace BCM. Refer to BCS-78, "Removal and Installation".
NO >> Repair or replace harness.

3. CHECK TRUNK LID OPENER ACTUATOR GROUND CIRCUIT

Check continuity between trunk lid lock assembly (trunk lid opener actuator) harness connector and ground.

Trunk lid lock assembly		Ground	Continuity
Connector	Terminal		
T5	3		Existed

Is the inspection normal?

YES >> Replace trunk lid lock assembly. Refer to DLK-214, "TRUNK LID ASSEMBLY : Removal and Installation"

NO >> Repair or replace harness.

REMOTE KEYLESS ENTRY RECEIVER

Description

INFOID:0000000003794867

Receives Intelligent Key operation and transmits to BCM.

Component Function Check

INFOID:0000000003794868

1. CHECK FUNCTION

With CONSULT-III

Check remote keyless entry receiver (“RKE OPE COUN1”) in Data Monitor mode with CONSULT-III.

Monitor item	Condition
RKE OPE COUN1	Checks whether value changes when operating Intelligent Key.

Is the inspection result normal?

YES >> Remote keyless entry receiver is OK.
NO >> Refer to DLK-67, "Diagnosis Procedure".

Diagnosis Procedure

INFOID:0000000003794869

1. CHECK REMOTE KEYLESS ENTRY RECEIVER OUTPUT SIGNAL

1. Turn ignition switch OFF.
2. Check signal between remote keyless entry receiver harness connector and ground with oscilloscope.

(+) Remote keyless entry receiver Connector	(+) Remote keyless entry receiver Terminal	(–)	Condition	Signal (Reference value)
M78	2	Ground	Waiting (All doors closed)	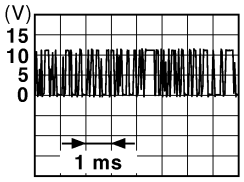 JMKIA0064GB
			When signal is received (All doors closed)	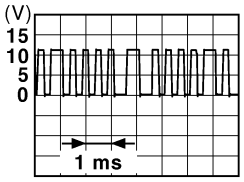 JMKIA0065GB

Is the inspection result normal?

YES >> GO TO 2.
NO >> GO TO 3.

2. CHECK REMOTE KEYLESS ENTRY RECEIVER CIRCUIT 1

1. Disconnect BCM connector and remote keyless entry receiver connector.
2. Check continuity between BCM harness connector and remote keyless entry receiver harness connector.

BCM Connector	BCM Terminal	Remote keyless entry receiver Connector	Remote keyless entry receiver Terminal	Continuity
M122	83	M78	2	Existed

3. Check continuity between BCM harness connector and ground.

BCM		Ground	Continuity
Connector	Terminal		
M122	83		Not existed

Is the inspection result normal?

YES >> INSPECTION END.
NO >> Repair or replace harness.

3. CHECK REMOTE KEYLESS ENTRY RECEIVER POWER SUPPLY

Check signal between remote keyless entry receiver harness connector and ground with oscilloscope.

(+)		(–)	Signal (Reference value)
Remote keyless entry receiver			
Connector	Terminal		
M78	4	Ground	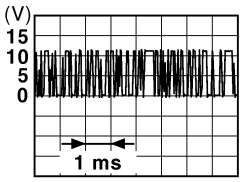 JMKIA0064GB

Is the inspection result normal?

YES >> GO TO 5.
NO >> GO TO 4.

4. CHECK REMOTE KEYLESS ENTRY RECEIVER CIRCUIT 2

1. Disconnect BCM connector and remote keyless entry receiver.
2. Check continuity between BCM harness connector and remote keyless entry receiver harness connector.

BCM		Remote keyless entry receiver		Continuity
Connector	Terminal	Connector	Terminal	
M122	103	M78	4	Existed

3. Check continuity between BCM harness connector and ground.

BCM		Ground	Continuity
Connector	Terminal		
M122	103		Not existed

Is the inspection result normal?

YES >> Replace BCM. Refer to BCS-78, "Removal and Installation".
NO >> Repair or replace harness.

5. CHECK REMOTE KEYLESS ENTRY RECEIVER CIRCUIT 1

1. Disconnect BCM connector and remote keyless entry receiver.
2. Check continuity between BCM connector and remote keyless entry receiver connector.

BCM		Remote keyless entry receiver		Continuity
Connector	Terminal	Connector	Terminal	
M123	137	M78	1	Existed

3. Check continuity between BCM harness connector and ground.

BCM		Ground	Continuity
Connector	Terminal		
M122	137		Not existed

Is the inspection result normal?

YES >> GO TO 6.
NO >> Repair or replace harness.

6. CHECK REMOTE KEYLESS ENTRY RECEIVER GROUND CIRCUIT 2

1. Connect remote keyless entry receiver connector.
2. Check continuity between remote keyless entry receiver harness connector and ground.

Remote keyless entry receiver		Ground	Continuity
Connector	Terminal		
M78	1		Existed

Is the inspection result normal?

YES >> Replace remote keyless entry receiver. Refer to DLK-244, "Removal and Installation".
NO >> Replace BCM. Refer to BCS-78, "Removal and Installation".

TRUNK LID OPENER SWITCH

Description

INFOID:0000000003794870

Output trunk lid open signal to BCM.

Component Function Check

INFOID:0000000003794871

1.CHECK FUNCTION

Check trunk lid opener switch (“TR/BD OPEN SW”) in “Data Monitor mode with CONSULT-III.

Monitor item	Condition
TR/BD OPEN SW	Trunk lid opener switch is pressed: ON
	Trunk lid opener switch is released: OFF

Is the inspection result normal?

YES >> Trunk lid opener switch is OK.
NO >> Refer to DLK-70, "Diagnosis Procedure".

Diagnosis Procedure

INFOID:0000000003794872

1.CHECK TRUNK LID OPENER INPUT SIGNAL

1. Turn ignition switch OFF.
2. Disconnect trunk lid opener switch connector.
3. Check signal between trunk lid opener switch harness connector and ground with oscilloscope.

(+)		(–)	Signal (Reference value)
Trunk lid opener switch			
Connector	Terminal		
M25	1	Ground	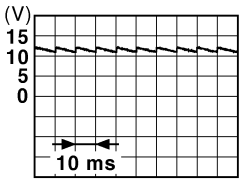 JPMIA0011GB

Is the inspection result normal?

YES >> GO TO 3.
NO >> GO TO 2.

2.CHECK TRUNK LID OPENER SWITCH CIRCUIT

1. Disconnect BCM connector.
2. Check continuity between BCM harness connector and trunk lid opener switch harness connector.

BCM		Trunk lid opener switch		Continuity
Connector	Terminal	Connector	Terminal	
M121	67	M25	1	Existed

3. Check continuity between BCM harness connector and ground.

BCM		Ground	Continuity
Connector	Terminal		
M121	67		Not existed

Is the inspection result normal?

YES >> Replace BCM. Refer to BCS-78, "Removal and Installation".

NO >> Repair or replace harness.

3. CHECK TRUNK LID OPENER SWITCH GROUND CIRCUIT

Check continuity between trunk lid opener switch harness connector and ground.

Trunk lid opener switch		Ground	Continuity
Connector	Terminal		
M25	2		Existed

Is the inspection result normal?

YES >> GO TO 4.
NO >> Repair or replace harness.

4. CHECK TRUNK LID OPENER SWITCH

Refer to DLK-71, "Component Inspection".

Is the inspection result normal?

YES >> GO TO 5.
NO >> Replace trunk lid opener switch. Refer to DLK-243, "Removal and Installation".

5. CHECK INTERMITTENT INCIDENT

Refer to GI-35, "Intermittent Incident".

>> INSPECTION END

Component Inspection

INFOID:0000000003794873

1. CHECK TRUNK LID OPENER SWITCH

1. Turn ignition switch OFF.
2. Disconnect trunk lid opener switch connector.
3. Check continuity between trunk lid opener switch terminal.

Trunk lid opener switch		Condition	Continuity
Terminal			
1	2	ON (press and hold)	Existed
		OFF (release)	Not existed

Is the inspection result normal?

YES >> INSPECTION END
NO >> Replace trunk lid opener switch. Refer to DLK-243, "Removal and Installation".

DOOR REQUEST SWITCH

Description

INFOID:0000000003794874

Transmits lock/unlock operation to BCM.

Component Function Check

INFOID:0000000003794875

1.CHECK FUNCTION

Check door request switch (“REQ SW-DR” or “REQ SW-AS”) in Data Monitor mode.

Monitor item	Condition
DR REQ SW AS REQ SW	Door request switch is pressed: ON
	Door request switch is released: OFF

Is the inspection result normal?

YES >> Door request switch is OK.
NO >> Refer to DLK-72, "Diagnosis Procedure".

Diagnosis Procedure

INFOID:0000000003794876

1.CHECK BCM OUTPUT SIGNAL

1. Turn ignition switch OFF.
2. Disconnect malfunctioning front outside handle (request switch) connector.
3. Check signal between malfunctioning front outside handle (request switch) harness connector and ground with oscilloscope.

(+)			(–)	Signal (Reference value)
Front outside handle (request switch)				
Connector		Terminal		
LH	D11	1	Ground	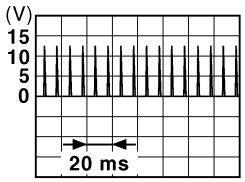 JMKIA0059GB
RH	D50			

Is the inspection result normal?

YES >> GO TO 3.
NO >> GO TO 2.

2.CHECK DOOR REQUEST SWITCH CIRCUIT

1. Disconnect BCM connector.
2. Check continuity between BCM harness connector and malfunctioning front outside handle (request switch) harness connector.

BCM		Front outside handle (request switch)			Continuity
Connector	Terminal	Connector		Terminal	
M122	101	LH	D11	1	Existed
	100	RH	D50		

3. Check continuity between BCM harness connector and ground.

BCM		Ground	Continuity
Connector	Terminal		
M122	101		Not existed
	100		

Is the inspection result normal?

YES >> Replace BCM. Refer to BCS-78, "Removal and Installation".
NO >> Repair or replace harness.

3. CHECK DOOR REQUEST SWITCH GROUND CIRCUIT

Check continuity between malfunctioning front outside handle (request switch) harness connector and ground.

Front outside handle (request switch)			Ground	Continuity
Connector		Terminal		
LH	D11	2		Existed
RH	D50			

Is the inspection result normal?

YES >> GO TO 4.
NO >> Repair or replace harness.

4. CHECK DOOR REQUEST SWITCH

Refer to DLK-73, "Component Inspection".

Is the inspection result normal?

YES >> GO TO 5.
NO >> Replace malfunctioning front outside handle. Refer to DLK-224, "OUTSIDE HANDLE : Removal and Installation".

5. CHECK INTERMITTENT INCIDENT

Refer to GI-35, "Intermittent Incident".

>> INSPECTION END

Component Inspection

INFOID:0000000003794877

1. CHECK DOOR REQUEST SWITCH

1. Turn ignition switch OFF.
2. Disconnect front outside handle (request switch) connector.
3. Check front outside handle (request switch).

Front outside handle (request switch)		Door request switch condition	Continuity
Terminal			
1	2	Pressed	Existed
		Released	Not existed

Is the inspection result normal?

YES >> INSPECTION END
NO >> Replace front outside handle. Refer to DLK-224, "OUTSIDE HANDLE : Removal and Installation".

TRUNK LID OPENER REQUEST SWITCH

Description

INFOID:0000000003794878

Performs trunk lid open request when it is pressed.

Component Function Check

INFOID:0000000003794879

1.CHECK FUNCTION

Check trunk lid opener request switch (“REQ SW -BD/TR ”) in Data Monitor mode.

Monitor item	Condition
REQ SW -BD/TR	Trunk lid opener request switch is pressed: ON
	Trunk lid opener request switch is released: OFF

Is the inspection result normal?

YES >> Trunk lid opener request switch is OK.
NO >> Refer to DLK-74, "Diagnosis Procedure".

Diagnosis Procedure

INFOID:0000000003794880

1.CHECK TRUNK LID OPENER SWITCH OUTPUT SIGNAL

1. Turn ignition switch OFF.
2. Disconnect trunk lid opener request switch connector.
3. Check signal between trunk lid opener request switch harness connector and ground with oscilloscope.

(+)		(–)	Signal (Reference value)
Trunk lid opener request switch			
Connector	Terminal		
T6	1	Ground	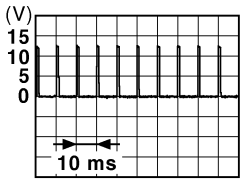 JPMIA0016GB

Is the inspection result normal?

YES >> GO TO 3.
NO >> GO TO 2.

2.CHECK TRUNK LID OPENER REQUEST SWITCH CIRCUIT

1. Disconnect BCM connector.
2. Check continuity between BCM harness connector and trunk lid opener request switch harness connector.

BCM		Trunk lid opener request switch		Continuity
Connector	Terminal	Connector	Terminal	
M121	61	T6	1	Existed

3. Check continuity between BCM harness connector and ground.

BCM		Ground	Continuity
Connector	Terminal		
M121	61		Not existed

Is the inspection result normal?

YES >> Replace BCM. Refer to BCS-78, "Removal and Installation".
NO >> Repair or replace harness.

3. CHECK TRUNK LID OPENER REQUEST SWITCH GROUND CIRCUIT

Check continuity between trunk lid opener request switch harness connector and ground.

Trunk lid opener request switch		Ground	Continuity
Connector	Terminal		
T6	2		Existed

Is the inspection result normal?

YES >> GO TO 4.
NO >> Repair or replace harness.

4. CHECK TRUNK LID OPENER REQUEST SWITCH

Refer to DLK-75, "Component Inspection".

Is the inspection result normal?

YES >> GO TO 5.
NO >> Replace trunk lid opener request switch. Refer to DLK-242, "Removal and Installation".

5. CHECK INTERMITTENT INCIDENT

Refer to GI-35, "Intermittent Incident".

>> INSPECTION END

Component Inspection

INFOID:0000000003794881

1. CHECK TRUNK LID OPENER REQUEST SWITCH

1. Turn ignition switch OFF.
2. Disconnect trunk lid opener request switch connector.
3. Check trunk lid opener request switch.

Trunk lid opener request switch		Condition		Continuity
Terminal				
1	2	Trunk lid opener request switch	Pressed	Existed
			Released	Not existed

Is the inspection result normal?

YES >> INSPECTION END
NO >> Replace trunk lid opener request switch. Refer to DLK-242, "Removal and Installation".

TRUNK ROOM LAMP SWITCH

Description

INFOID:0000000003840907

Detects trunk lid open/close condition.

Component Function Check

INFOID:0000000003840908

1. CHECK FUNCTION

With CONSULT-III

Check (“TRNK/HAT MNTR”) in Data Monitor mode with CONSULT-III.

Monitor item	Condition	
TRNK/HAT MNTR	OPEN	: ON
	CLOSE	: OFF

Is the inspection result normal?

YES >> Trunk room lamp switch is OK.
NO >> Refer to DLK-77, "Component Inspection".

Diagnosis Procedure

INFOID:0000000003840909

1. CHECK TRUNK ROOM LAMP SWITCH INPUT SIGNAL

1. Turn ignition switch OFF.
2. Disconnect trunk lid lock assembly.
3. Check signal between BCM connector and ground with oscilloscope.

(+) Trunk lid lock assembly		(–)	Trunk condition	Signal (Reference value)
Connector	Terminal			
T5	1	Ground	OPEN	0
			CLOSE	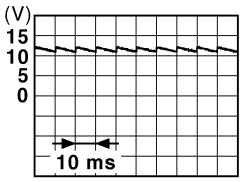 JPMIA0011GB

Is the inspection result normal?

YES >> GO TO 3.
NO >> GO TO 2.

2. CHECK TRUNK ROOM LAMP SWITCH CIRCUIT

1. Disconnect BCM connector.
2. Check continuity between BCM connector and trunk lid lock assembly connector.

BCM		Trunk lid lock assembly		Continuity
Connector	Terminal	Connector	Terminal	
M121	50	T5	1	Existed

3. Check continuity between BCM connector and ground.

BCM		Ground	Continuity
Connector	Terminal		
M121	50		Not existed

Is the inspection result normal?

YES >> Replace BCM. Refer to BCS-78, "Removal and Installation".
NO >> Repair or replace harness.

3. CHECK TRUNK ROOM LAMP SWITCH GROUND CIRCUIT

Check continuity between trunk lid lock assembly connector and ground.

Trunk lid lock assembly		Ground	Continuity
Connector	Terminal		
T5	3		Existed

Is the inspection result normal?

YES >> GO TO 4.
NO >> Repair or replace harness.

4. CHECK TRUNK ROOM LAMP SWITCH

Refer to DLK-77, "Component Inspection".

Is the inspection result normal?

YES >> GO TO 5.
NO >> Replace trunk lid lock assembly. Refer to DLK-214, "TRUNK LID ASSEMBLY : Removal and Installation".

5. CHECK INTERMITTENT INCIDENT

Refer to GI-35, "Intermittent Incident".

>> INSPECTION END.

Component Inspection

INFOID:0000000003840910

1. CHECK TRUNK ROOM LAMP SWITCH

1. Turn ignition switch OFF.
2. Disconnect trunk lid lock assembly connector.
3. Check trunk room lamp switch.

Trunk lid lock assembly		Condition		Continuity
Terminal				
1	3	Trunk lid	OPEN	Existed
			CLOSE	Not existed

Is the inspection result normal?

YES >> INSPECTION END.
NO >> Replace trunk lid lock assembly. Refer to DLK-214, "TRUNK LID ASSEMBLY : Removal and Installation".

UNLOCK SENSOR

Description

INFOID:0000000003794882

Detects door lock condition of driver door.

Component Function Check

INFOID:0000000003794883

1.CHECK FUNCTION

Check unlock sensor (“DOOR STAT-DR”) in “Data Monitor” mode.

Monitor item	Condition
DOOR STAT-DR	Front door lock (driver side) LOCK: OFF
	Front door lock (driver side) UNLOCK: ON

Is the inspection result normal?

YES >> Unlock sensor is OK.
NO >> Refer to DLK-78, "Diagnosis Procedure".

Diagnosis Procedure

INFOID:0000000003794884

1.CHECK BCM OUTPUT SIGNAL

1. Turn ignition switch OFF.
2. Disconnect front door lock assembly (driver side) (unlock sensor) connector.
3. Check signal between front door lock assembly (driver side) (unlock sensor) harness connector and ground with oscilloscope.

(+)		(–)	Signal (Reference value)
Front door lock assembly (driver side) (unlock sensor)			
Connector	Terminal		
D9	3	Ground	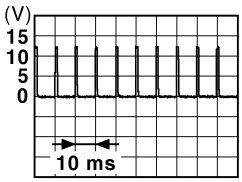 JPMIA0012GB

Is the inspection result normal?

YES >> GO TO 3.
NO >> GO TO 2.

2.CHECK UNLOCK SENSOR CIRCUIT

1. Disconnect BCM connector.
2. Check continuity between BCM harness connector and front door lock assembly (driver side) (unlock sensor) harness connector.

BCM		Front door lock assembly (driver side) (unlock sensor)		Continuity
Connector	Terminal	Connector	Terminal	
M123	119	D9	3	Existed

3. Check continuity between BCM harness connector and ground.

BCM		Ground	Continuity
Connector	Terminal		
M123	119		Not existed

Is the inspection result normal?

YES >> Replace BCM. Refer to BCS-78, "Removal and Installation".
NO >> Repair or replace harness.

3. CHECK UNLOCK SENSOR GROUND CIRCUIT

Check continuity between front door lock assembly (driver side) (unlock sensor) harness connector and ground.

Front door lock assembly (driver side) (unlock sensor)		Ground	Continuity
Connector	Terminal		
D9	4		Existed

Is the inspection result normal?

YES >> GO TO 4.
NO >> Repair or replace harness.

4. CHECK UNLOCK SENSOR

Refer to DLK-79, "Component Inspection".

Is the inspection result normal?

YES >> GO TO 5.
NO >> Replace front door lock assembly (driver side). Refer to DLK-214, "TRUNK LID ASSEMBLY : Removal and Installation".

5. CHECK INTERMITTENT INCIDENT

Refer to GI-35, "Intermittent Incident".

>> INSPECTION END

Component Inspection

INFOID:0000000003794885

1. CHECK UNLOCK SENSOR

1. Turn ignition switch OFF.
2. Disconnect front door lock assembly (driver side) (unlock sensor).
3. Check front door lock assembly (driver side) (unlock sensor) terminals.

Front door lock assembly (driver side) (unlock sensor)		Condition		Continuity
Terminal				
3	4	Front door lock assembly (driver side) (unlock sensor)	Unlock	Existed
			Lock	Not existed

Is the inspection result normal?

YES >> INSPECTION END
NO >> Replace front door lock assembly (driver side). Refer to DLK-202, "DOOR ASSEMBLY : Removal and Installation".

OUTSIDE KEY ANTENNA

Description

INFOID:0000000003794886

Detects whether Intelligent Key is outside the vehicle.
Integrated in front outside handle (LH, RH) and installed in rear bumper.

Component Function Check

INFOID:0000000003794887

1. CHECK OUTSIDE KEY ANTENNA FUNCTION

Check that Intelligent Key is in each outside key antenna detection range.

Does door lock/unlock when each request switch is pressed?

YES >> Outside key antenna is OK.
NO >> Refer to DLK-80, "Diagnosis Procedure".

Diagnosis Procedure

INFOID:0000000003794888

1. CHECK OUTSIDE KEY ANTENNA INPUT SIGNAL 1

1. Turn ignition switch OFF.
2. Check signal between BCM harness connector and ground with oscilloscope.

(+) BCM Connector		Terminal	(–)	Condition		Signal (Reference value.)
M122	Front LH	76, 77	Ground	Door request switch or trunk lid opener request switch is pushed	When Intelligent Key is in the antenna detection area.	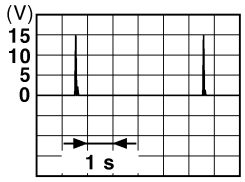 JMKIA0062GB
	Front RH	74, 75				
M121	Rear bumper	38, 39			When Intelligent Key is not in the antenna detection area.	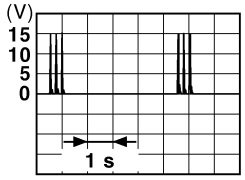 JMKIA0063GB

Is the inspection result normal?

YES >> Replace BCM. Refer to BCS-78, "Removal and Installation"
NO >> GO TO 2.

2. CHECK OUTSIDE KEY ANTENNA CIRCUIT

1. Disconnect BCM connector and malfunctioning outside key antenna connector.
2. Check continuity between BCM harness connector and outside key antenna harness connector.

BCM		Outside key antenna		Continuity
Connector	Terminal	Connector	Terminal	
M122	77	D12 (front LH)	1	Existed
	76		2	
	75	D52 (front RH)	1	
	74		2	
M121	39	B85 (rear bumper)	1	
	38		2	

3. Check continuity between BCM harness connector and ground.

BCM			Continuity
Connector	Terminal		
M122	74	Ground	Not existed
	75		
	76		
	77		
M121	38		
	39		

Is the inspection result normal?

YES >> GO TO 3.
NO >> Repair or replace harness.

3. CHECK OUTSIDE KEY ANTENNA INPUT SIGNAL 2

1. Replace malfunctioning outside key antenna. Refer to DLK-238, "DRIVER SIDE : Removal and Installation" or DLK-238, "REAR BUMPER : Removal and Installation", DLK-238, "PASSENGER SIDE : Removal and Installation".
2. Connect BCM connector and outside key antenna connector.
3. Check signal between BCM harness connector and ground with oscilloscope.

(+)			(–)	Condition		Signal (Reference value.)
BCM						
Connector		Terminal				
M122	Front LH	76, 77	Ground	Door request switch or trunk lid opener request switch is pushed	When Intelligent Key is in the antenna detection area.	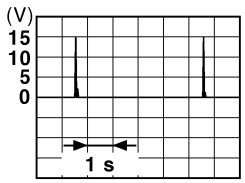 JMKIA0062GB
	Front RH	74, 75				
M121	Rear bumper	38, 39			When Intelligent Key is not in the antenna detection area.	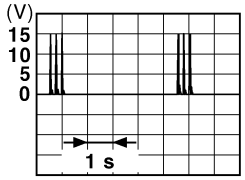 JMKIA0063GB

Is the inspection result normal?

YES >> INSPECTION END
NO >> Replace BCM. Refer to BCS-78, "Removal and Installation".

INTELLIGENT KEY WARNING BUZZER

Description

INFOID:0000000003794889

Answers back and warns for an inappropriate operation.

Component Function Check

INFOID:0000000003794890

1.CHECK FUNCTION

Check Intelligent Key warning buzzer (“OUTSIDE BUZZER”) in Active Test mode.

Is the inspection result normal?

YES >> Intelligent Key warning buzzer (engine room) is OK.
NO >> Refer to DLK-82, "Diagnosis Procedure".

Diagnosis Procedure

INFOID:0000000003794891

1.CHECK FUSE

1. Turn ignition switch OFF.
2. Check 10 A fuse, [No.6, located in fuse block (J/B)].

Is fuse fusing?

YES >> Replace the blown fuse after repairing the affected circuit if a fuse is blown.
NO >> GO TO 2.

2.CHECK INTELLIGENT KEY WARNING BUZZER POWER SUPPLY CIRCUIT

1. Disconnect Intelligent Key warning buzzer connector.
2. Check voltage between Intelligent Key warning buzzer harness connector and ground.

(+)		(–)	Voltage (V) (Approx.)
Intelligent Key warning buzzer			
Connector	Terminal		
E25	1	Ground	Battery voltage

Is the inspection result normal?

YES >> GO TO 3.
NO >> Repair or replace Intelligent Key warning buzzer power supply circuit.

3.CHECK INTELLIGENT KEY WARNING BUZZER CIRCUIT

1. Disconnect BCM connector.
2. Check continuity between BCM harness connector and Intelligent Key warning buzzer harness connector.

BCM		Intelligent Key warning buzzer		Continuity
Connector	Terminal	Connector	Terminal	
M121	64	E25	3	Existed

3. Check continuity between BCM harness connector and ground.

BCM		Ground	Continuity
Connector	Terminal		
M121	64		Not existed

Is the inspection result normal?

YES >> GO TO 4.
NO >> Repair or replace harness.

4.CHECK INTELLIGENT KEY WARNING BUZZER

Check DLK-83, "Component Inspection".

Is the inspection result normal?

YES >> Replace BCM. Refer to BCS-78, "Removal and Installation".
NO >> Replace Intelligent Key warning buzzer. Refer to DLK-240, "Removal and Installation".

Component Inspection

INFOID:0000000003794892

1. CHECK INTELLIGENT KEY WARNING BUZZER

Connect battery power supply to Intelligent Key warning buzzer terminals 1 and 3, and check the operation.

Intelligent key warning buzzer			Operation
Connector	Terminal		
	(+)	(–)	
E25	1	3	Buzzer sounds

Is the inspection result normal?

YES >> INSPECTION END
NO >> Replace Intelligent Key warning buzzer. Refer to DLK-240, "Removal and Installation".

INTELLIGENT KEY

Description

INFOID:0000000003794893

The following functions are available when having and carrying electronic ID.
- Door lock/unlock
- Trunk lid open
- Engine start

Remote control entry function and panic alarm function have specific buttons.

Component Function Check

INFOID:0000000003794894

1. CHECK FUNCTION

Check remote keyless entry receiver (“RKE OPE COUN1”) in Data Monitor mode with CONSULT-III.

Monitor item	Condition
RKE OPE COUN1	Check that the numerical value is changing while operating on the Intelligent Key.

Is the inspection result normal?

YES >> Intelligent Key is OK.
NO >> Refer to DLK-84, "Diagnosis Procedure".

Diagnosis Procedure

INFOID:0000000003794895

1. CHECK INTELLIGENT KEY BATTERY

Check by connecting a resistance (approximately 300 Ω) so that the current value becomes about 10 mA.

Standard : Approx. 2.5 - 3.0 V

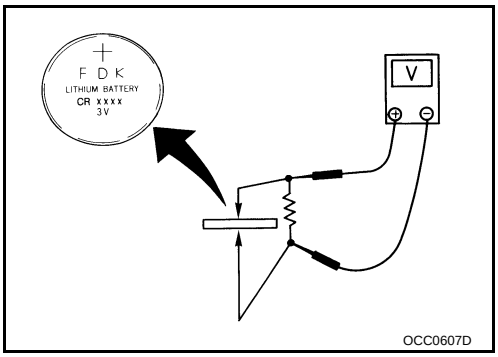

Is the measurement value within the specification?

YES >> Replace Intelligent Key.
NO >> Replace Intelligent Key battery. Refer to DLK-84, "Component Inspection".

Component Inspection

INFOID:0000000003794896

1. REPLACE INTELLIGENT KEY BATTERY

1. Release the lock knob at the back of the Intelligent Key and remove the mechanical key.
2. Insert a flat-bladed screwdriver (A) wrapped with a cloth into the slit of the corner and twist it to separate the upper part from the lower part.

   CAUTION:
   - **Never touch the circuit board or battery terminal.**
   - **The key fob is water-resistant. However, if it does get wet, immediately wipe it dry.**

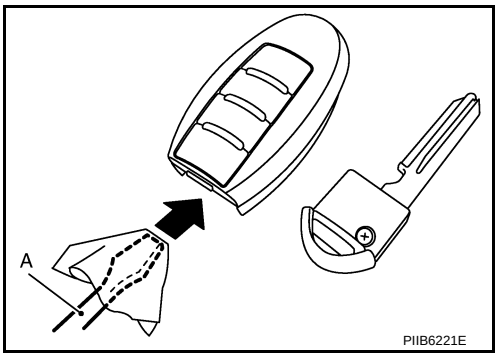

3. Replace the battery with new one.

4. Align the tips of the upper and lower parts, and then push them together until it is securely closed.

CAUTION:

- **When replacing battery, keep dirt, grease, and other foreign matter off the electrode contact area.**
- **After replacing the battery, check that all Intelligent Key functions work normally.**

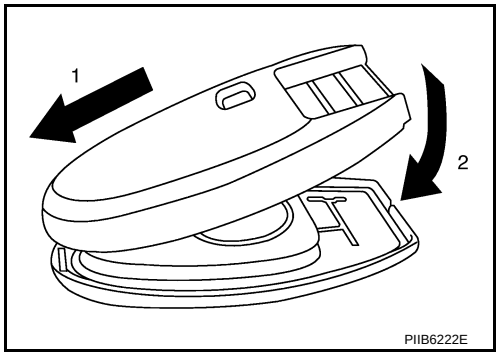

Is the inspection result normal?

YES >> Intelligent Key is OK.

NO >> Check remote keyless entry receiver. Refer to DLK-67, "Component Function Check".

Special Repair Requirement

INFOID:0000000003794897

Refer to CONSULT-III Operation Manual NATS-IVIS/NVIS.

KEY SLOT

Description

INFOID:0000000003794898

Detect whether Intelligent Key is inserted.
Immobilizer antenna amp checks Intelligent Key transponder.

Component Function Check

INFOID:0000000003794899

1.CHECK FUNCTION

Check key slot (“KEY SW -SLOT”) in Data Monitor mode with CONSULT-III.

Monitor item	Condition
KEY SW-SLOT	Key is inserted in key slot: ON
	Key is removed from key slot: OFF

Is the inspection result normal?

YES >> Key slot is OK.
NO >> Refer to DLK-86, "Diagnosis Procedure".

Diagnosis Procedure

INFOID:0000000003794900

1.CHECK FUSE

1. Turn ignition switch OFF.
2. Check 10 A fuse, [No.9, located in fuse block (J/B)].

Is fuse fusing?

YES >> Replace the blown fuse after repairing the affected circuit if a fuse is blown.
NO >> GO TO 2.

2.CHECK KEY SLOT POWER SUPPLY CIRCUIT

1. Disconnect key slot connector.
2. Check voltage between slot harness connector and ground.

(+)		(–)	Voltage (V) (Approx.)
Key slot			
Connector	Terminal		
M99	1	Ground	Battery voltage

Is the inspection result normal?

YES >> GO TO 3.
NO >> Repair or replace key slot power supply circuit.

3.CHECK KEY SLOT GROUND CIRCUIT

Check continuity between key slot harness connector and ground.

Key slot		Ground	Continuity
Connector	Terminal		
M99	7		Existed

Is the inspection result normal?

YES >> GO TO 4.
NO >> Repair or replace harness.

4.CHECK KEY SLOT CIRCUIT

1. Disconnect BCM connector.
2. Check continuity between BCM harness connector and key slot harness connector.

BCM		Key slot		Continuity
Connector	Terminal	Connector	Terminal	
M123	121	M99	11	Existed

3. Check continuity between BCM harness connector and ground.

BCM		Ground	Continuity
Connector	Terminal		
M123	121		Not existed

Is the inspection result normal?

YES >> GO TO 5.
NO >> Repair or replace harness.

5. CHECK KEY SLOT

Refer to DLK-87, "Component Inspection".

Is the inspection result normal?

YES >> GO TO 6.
NO >> Replace key slot. Refer to DLK-241, "Removal and Installation".

6. CHECK INTERMITTENT INCIDENT

Refer to GI-35, "Intermittent Incident".

>> INSPECTION END

Component Inspection

INFOID:0000000003794901

1. CHECK KEY SLOT

1. Turn ignition switch OFF.
2. Disconnect key slot connector.
3. Check key slot.

Key slot		Condition	Continuity
Terminal			
1	11	Intelligent Key inserted	Existed
		Intelligent Key removed	Not existed

Is the inspection result normal?

YES >> INSPECTION END
NO >> Replace key slot. Refer to DLK-241, "Removal and Installation".

KEY SLOT ILLUMINATION

Description

INFOID:0000000003794902

Blinks when Intelligent Key insertion is required.

Component Function Check

INFOID:0000000003794903

1.CHECK FUNCTION

Check key slot illumination (“KEY SLOT ILLUMI”) Active Test mode.

Is the inspection result normal?

YES >> Key slot illumination is OK.
NO >> Refer to DLK-88, "Diagnosis Procedure".

Diagnosis Procedure

INFOID:0000000003794904

1.CHECK FUSE

1. Turn ignition switch OFF.
2. Check 10 A fuse, [No.6, located in fuse block (J/B)].

Is fuse fusing?

YES >> Replace the blown fuse after repairing the affected circuit if a fuse is blown.
NO >> GO TO 2.

2.CHECK KEY SLOT ILLUMINATION OUTPUT SIGNAL

Check voltage between key slot connector and ground.

(+)		(–)	Condition	Key slot illumination	Voltage (V) (Approx.)
Key slot					
Connector	Terminal				
M99	6	Ground	Intelligent Key inserted	OFF	Battery voltage
			Intelligent Key removed	ON	0

Is the inspection result normal?

YES >> GO TO 5.
NO >> GO TO 3.

3.CHECK KEY SLOT CIRCUIT

1. Disconnect BCM and key slot connector.
2. Check continuity between BCM harness connector and key slot harness connector.

BCM		Key slot		Continuity
Connector	Terminal	Connector	Terminal	
M122	92	M99	6	Existed

3. Check continuity between BCM harness connector and ground.

BCM		Ground	Continuity
Connector	Terminal		
M122	92		Not existed

Is the inspection result normal?

YES >> GO TO 4.
NO >> Repair or replace harness.

4.CHECK KEY SLOT POWER SUPPLY CIRCUIT

Check voltage between key slot harness connector and ground.

(+)		(–)	Voltage (V) (Approx.)
Key slot			
Connector	Terminal		
M99	5	Ground	Battery voltage

Is the inspection result normal?

YES >> GO TO 8.
NO >> Repair or replace harness.

5. CHECK KEY SLOT GROUND CIRCUIT 1

Check continuity between key slot harness connector and ground.

Key slot		Ground	Continuity
Connector	Terminal		
M99	7		Existed

Is the inspection result normal?

YES >> GO TO 6.
NO >> Repair or replace harness.

6. CHECK KEY SLOT

Refer to DLK-89, "Component Inspection".

Is the inspection result normal?

YES >> GO TO 7.
NO >> Replace key slot. Refer to DLK-241, "Removal and Installation".

7. CHECK INTERMITTENT INCIDENT

Refer to GI-35, "Intermittent Incident".

>> INSPECTION END

8. CHECK KEY SLOT GROUND CIRCUIT 2

Check continuity between key slot harness connector and ground.

Key slot		Ground	Continuity
Connector	Terminal		
M99	7		Existed

Is the inspection result normal?

YES >> Repair or replace BCM. Refer to BCS-78, "Removal and Installation".
NO >> Repair or replace harness.

Component Inspection

INFOID:0000000003794905

1. CHECK KEY SLOT ILLUMINATION

1. Turn ignition switch OFF.
2. Disconnect key slot connector.
3. Connect battery power supply to key slot terminals 5 and 6, and check the operation.

Key slot			Operation
Connector	Terminal		
	(+)	(–)	
M99	5	6	Key slot illuminates

Is the inspection result normal?

YES >> INSPECTION END

NO >> Replace key slot. Refer to DLK-241, "Removal and Installation".

HORN FUNCTION

Description

INFOID:0000000003794906

Perform answer-back for each operation with horn.

Component Function Check

INFOID:0000000003794907

1.CHECK FUNCTION

1. Select “HORN” in “ACTIVE TEST” mode with CONSULT-III.
2. Check the horn (high/low) operation.

Test item		Description	
HORN	ON	Horn relay	ON (for 20 ms)

Is the operation normal?

YES >> Horn function is OK.
NO >> Go to DLK-91, "Diagnosis Procedure".

Diagnosis Procedure

INFOID:0000000003794908

1.CHECK HORN FUNCTION

Check horn function with horn switch

Do the horns sound?

YES >> GO TO 2.
NO >> Go to HRN-2, "Wiring Diagram - HORN -".

2.CHECK HORN RELAY POWER SUPPLY

1. Turn ignition switch ON.
2. Perform “ACTIVE TEST” (“HORN”) with CONSULT-III.
3. Check voltage between horn relayconnector and ground.

Horn relay		Ground	Test item		Voltage (V) (Approx.)
Connector	Terminal				
E5	1		HORN	ON	Battery voltage → 0 → Battery voltage
				Other than above	Battery voltage

Is the inspection result normal?

YES >> GO TO 4.
NO >> GO TO 3.

3.CHECK HORN RELAY CIRCUIT

1. Turn ignition switch OFF.
2. Disconnect IPDM E/R connector and horn relay.
3. Check continuity between IPDM E/R harness connector and horn relay connector.

IPDM E/R		Horn relay		Continuity
Connector	Terminal	Connector	Terminal	
E11	44	E5	1	Existed

4. Check continuity between driver seat control unit harness connector and ground.

IPDM E/R		Ground	Continuity
Connector	Terminal		
E11	44		Not existed

Is the inspection result normal?

YES >> Replace IPDM E/R. Refer to PCS-34, "Removal and Installation".
NO >> Repair or replace harness.

4. CHECK INTERMITTENT INCIDENT

Refer to GI-35, "Intermittent Incident".

Is the inspection result normal?

>> INSPECTION END

COMBINATION METER DISPLAY FUNCTION

Description

INFOID:0000000003794909

Displays each operation method guide and warning for system malfunction.

Component Function Check

INFOID:0000000003794910

1.CHECK FUNCTION

Check the operation with (“LCD”) in the Active Test.

Is each warning displayed on meter display?

Is the inspection result normal?

YES >> Meter display is OK.
NO >> Refer to DLK-93, "Diagnosis Procedure".

Diagnosis Procedure

INFOID:0000000003794911

1.CHECK COMBINATION METER

Refer to MWI-67, "DTC Index".

Is the inspection result normal?

YES >> GO TO 2.
NO >> Check combination meter. Refer to MWI-4, "Work flow".

2.CHECK INTERMITTENT INCIDENT

Refer to GI-35, "Intermittent Incident".

>> INSPECTION END

BUZZER (COMBINATION METER)

Description

INFOID:0000000003794912

Performs operation method guide and warning with buzzer.

Component Function Check

INFOID:0000000003794913

1.CHECK FUNCTION

1. Check the operation with “INSIDE BUZZER” in the Active Test.
2. Touch “TAKE OUT”, “KNOB”or “KEY”on screen.

Is the inspection result normal?

Yes >> Warning buzzer in combination meter is OK.
No >> Refer to DLK-94, "Diagnosis Procedure".

Diagnosis Procedure

INFOID:0000000003794914

1.CHECK METER BUZZER CIRCUIT

Refer to WCS-21, "Component Function Check".

Is the inspection result normal?

Yes >> GO TO 2.
No >> Repair or replace meter buzzer circuit.

2.CHECK INTERMITTENT INCIDENT

Refer to GI-35, "Intermittent Incident".

>> INSPECTION END

KEY WARNING LAMP

Description

INFOID:0000000003794915

Performs operation method guide and warning together with buzzer.

Component Function Check

INFOID:0000000003794916

1.CHECK FUNCTION

Check the operation with “INDICATOR” in “Active Test” mode with CONSULT-III.

Test item	Condition	
INDICATOR	RED ON	Key warning lamp (red) illuminates
	RED IND	Key warning lamp (red) flashes

Is the inspection result normal?

YES >> Key warning lamp in combination meter is OK.
NO >> Refer to DLK-95, "Diagnosis Procedure".

Diagnosis Procedure

INFOID:0000000003794917

1.CHECK KEY WARNING LAMP

Refer toMWI-4, "Work flow".

Is the inspection result normal?

Yes >> GO TO 2.
No >> Repair or replace key warning lamp circuit.

2.CHECK INTERMITTENT INCIDENT

Refer to GI-35, "Intermittent Incident".

>> INSPECTION END

HAZARD FUNCTION

Description

INFOID:0000000003794918

Perform answer-back for each operation with number of blinks.

Component Function Check

INFOID:0000000003794919

1.CHECK FUNCTION

Check hazard warning lamp (“FLASHER”) in Active Test.

Is the inspection result normal?

YES >> Hazard warning lamp circuit is OK.
NO >> Refer to DLK-96, "Diagnosis Procedure".

Diagnosis Procedure

INFOID:0000000003794920

1.CHECK HAZARD SWITCH CIRCUIT

Refer to EXL-90, "Wiring Diagram - TURN AND HAZARD WARNING LAMPS -" (For xenon type) or EXL-262, "Wiring Diagram - TURN AND HAZARD WARNING LAMPS -" (For halogen type)

Is the inspection result normal?

YES >> GO TO 2.
NO >> Repair or replace hazard warning switch circuit. Refer to EXL-328, "Symptom Table".

2.CHECK INTERMITTENT INCIDENT

Refer to GI-35, "Intermittent Incident".

>> INSPECTION END

POWER DOOR LOCK SYSTEM

Wiring Diagram - POWER DOOR LOCK SYSTEM -

INFOID:0000000003940917

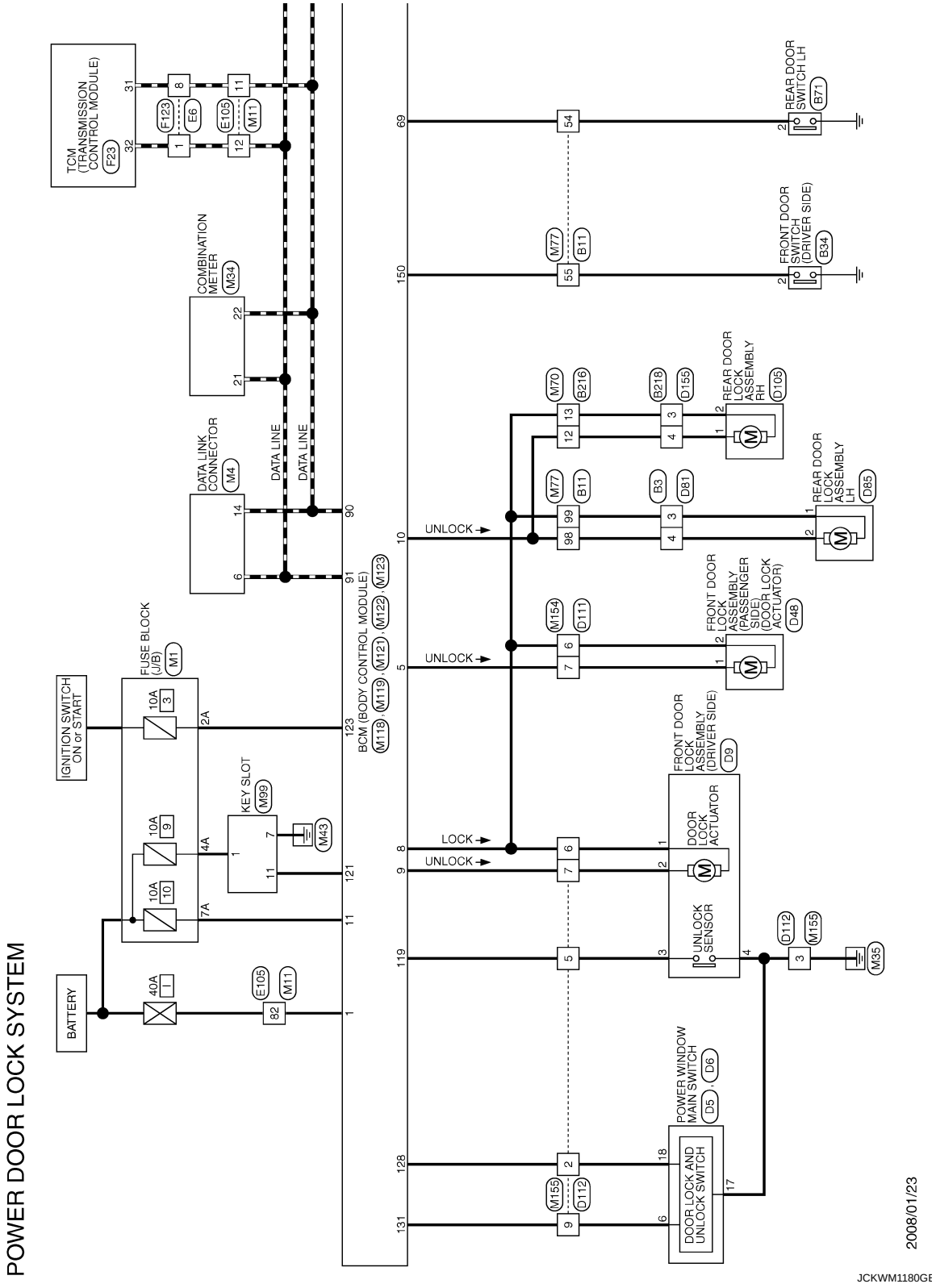

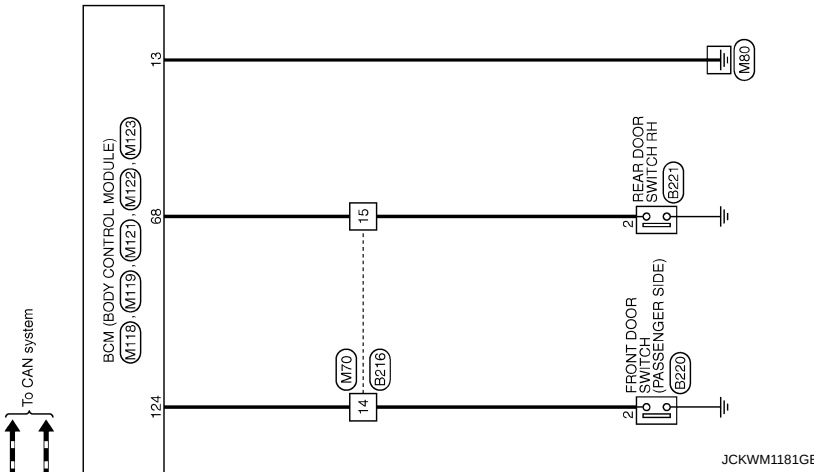
To CAN system
BCM (BODY CONTROL MODULE)
M118, M119, M121, M122, M123
124
68
13
14
15
M70
B216
2
FRONT DOOR SWITCH (PASSENGER SIDE)
B220
2
REAR DOOR SWITCH RH
B221
M80
JCKWM1181GE

POWER DOOR LOCK SYSTEM

Connector No.	B3
Connector Name	WIRE TO WIRE
Connector Type	NS10MW-CS

H.S.

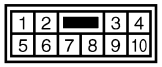

Terminal No.	Color of Wire	Signal Name [Specification]
3	V	–
4	G	–

Connector No.	B11
Connector Name	WIRE TO WIRE
Connector Type	TH80MW-CS19

H.S.

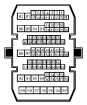

Terminal No.	Color of Wire	Signal Name [Specification]
54	BR	–
55	SB	–
98	G	–
99	V	–

Connector No.	B34
Connector Name	FRONT DOOR SWITCH (DRIVER SIDE)
Connector Type	A03FW

H.S.

Terminal No.	Color of Wire	Signal Name [Specification]
2	SB	–

Connector No.	B71
Connector Name	REAR DOOR SWITCH LH
Connector Type	A03FW

H.S.

Terminal No.	Color of Wire	Signal Name [Specification]
2	BR	–

Connector No.	B216
Connector Name	WIRE TO WIRE
Connector Type	NS16MBR-CS

H.S.

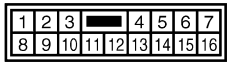

Terminal No.	Color of Wire	Signal Name [Specification]
12	G	–
13	V	–
14	R	–
15	W	–

Connector No.	B218
Connector Name	WIRE TO WIRE
Connector Type	NS10MW-CS

H.S.

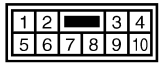

Terminal No.	Color of Wire	Signal Name [Specification]
3	V	–
4	G	–

Connector No.	B220
Connector Name	FRONT DOOR SWITCH (PASSENGER SIDE)
Connector Type	A03FW

H.S.

Terminal No.	Color of Wire	Signal Name [Specification]
2	R	–

Connector No.	B221
Connector Name	REAR DOOR SWITCH RH
Connector Type	A03FW

H.S.

Terminal No.	Color of Wire	Signal Name [Specification]
2	W	–

JCKWM1182GE

POWER DOOR LOCK SYSTEM

Connector No.	D5
Connector Name	POWER WINDOW MAIN SWITCH
Connector Type	NS16FW-CS

H.S.

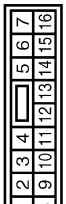

Terminal No.	Color of Wire	Signal Name [Specification]
6	LG	–

Connector No.	D6
Connector Name	POWER WINDOW MAIN SWITCH
Connector Type	NS03FW-CS

H.S.

Terminal No.	Color of Wire	Signal Name [Specification]
17	B	–
18	GR	–

Connector No.	D9
Connector Name	FRONT DOOR LOCK ASSEMBLY (DRIVER SIDE)
Connector Type	E06FGY-RS

H.S.

Terminal No.	Color of Wire	Signal Name [Specification]
1	R	–
2	L	–
3	O	–
4	B	–

Connector No.	D48
Connector Name	FRONT DOOR LOCK ASSEMBLY (PASSENGER SIDE)
Connector Type	E06FGY-RS

H.S.

Terminal No.	Color of Wire	Signal Name [Specification]
1	L	–
2	V	–

Connector No.	D81
Connector Name	WIRE TO WIRE
Connector Type	NS10FW-CS

H.S.

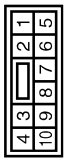

Terminal No.	Color of Wire	Signal Name [Specification]
3	V	–
4	G	–

Connector No.	D85
Connector Name	REAR DOOR LOCK ASSEMBLY LH
Connector Type	E06FGY-RS

H.S.

Terminal No.	Color of Wire	Signal Name [Specification]
1	V	–
2	G	–

Connector No.	D105
Connector Name	REAR DOOR LOCK ASSEMBLY RH
Connector Type	E06FGY-RS

H.S.

Terminal No.	Color of Wire	Signal Name [Specification]
1	G	–
2	V	–

Connector No.	D111
Connector Name	WIRE TO WIRE
Connector Type	NS16FW-CS

H.S.

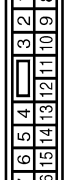

Terminal No.	Color of Wire	Signal Name [Specification]
6	V	–
7	L	–

JCKWM1183GE

POWER DOOR LOCK SYSTEM

Connector No.	D112
Connector Name	WIRE TO WIRE
Connector Type	NS16FW-CS

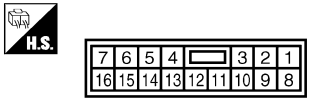

Terminal No.	Color of Wire	Signal Name [Specification]
2	GR	–
3	B	–
5	O	–
6	R	–
7	L	–
9	LG	–

Connector No.	D155
Connector Name	WIRE TO WIRE
Connector Type	NS10FW-CS

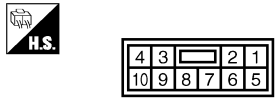

Terminal No.	Color of Wire	Signal Name [Specification]
3	V	–
4	G	–

Connector No.	E6
Connector Name	WIRE TO WIRE
Connector Type	TK16MGY-1V

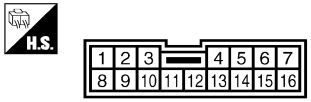

Terminal No.	Color of Wire	Signal Name [Specification]
1	L	–
8	P	–

Connector No.	E105
Connector Name	WIRE TO WIRE
Connector Type	TH70MW-CS10-M3

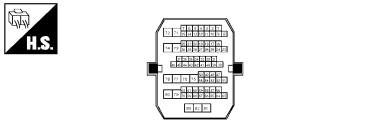

Terminal No.	Color of Wire	Signal Name [Specification]
11	P	–
12	L	–
82	LG	–

Connector No.	F23
Connector Name	TCM (TRANSMISSION CONTROL MODULE)
Connector Type	RH40FB-RZ8-L-RH

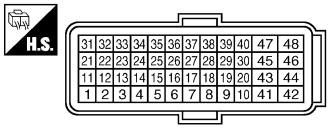

Terminal No.	Color of Wire	Signal Name [Specification]
31	P	CAN-L
32	L	CAN-H

Connector No.	F123
Connector Name	WIRE TO WIRE
Connector Type	TK16FGY-1V

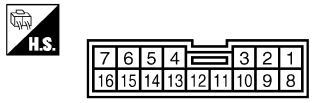

Terminal No.	Color of Wire	Signal Name [Specification]
1	L	–
8	P	–

Connector No.	M1
Connector Name	FUSE BLOCK (J/B)
Connector Type	NS06FW-M2

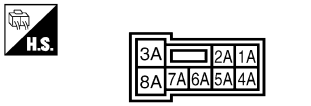

Terminal No.	Color of Wire	Signal Name [Specification]
2A	G/O	–
4A	G/Y	–
7A	Y/R	–

Connector No.	M4
Connector Name	DATA LINK CONNECTOR
Connector Type	BD16FW

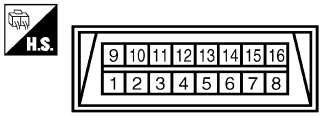

Terminal No.	Color of Wire	Signal Name [Specification]
6	L	–
14	P	–

JCKWM1184GE

POWER DOOR LOCK SYSTEM

Connector No.	M11
Connector Name	WIRE TO WIRE
Connector Type	TH70FW-CS10-M3

Terminal No.	Color of Wire	Signal Name [Specification]
11	P	–
12	L	–
82	W/B	–

Connector No.	M34
Connector Name	COMBINATION METER
Connector Type	TH40FW-NH

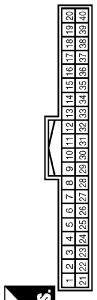

Terminal No.	Color of Wire	Signal Name [Specification]
21	L	CAN-H
22	P	CAN-L

Connector No.	M70
Connector Name	WIRE TO WIRE
Connector Type	NS16FBR-CS

Terminal No.	Color of Wire	Signal Name [Specification]
12	G/Y	–
13	V	–
14	R/B	–
15	R/W	–

Connector No.	M77
Connector Name	WIRE TO WIRE
Connector Type	TH80FW-CS19

Terminal No.	Color of Wire	Signal Name [Specification]
54	R/B	–
55	SB	–
98	G/Y	–
99	V	–

Connector No.	M99
Connector Name	KEY SLOT
Connector Type	TH12FW-NH

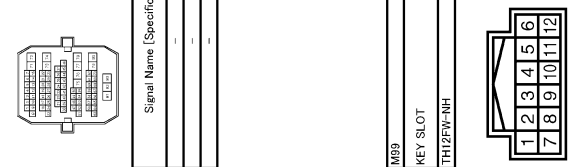

Terminal No.	Color of Wire	Signal Name [Specification]
1	G/Y	BAT
7	B	GND
11	Y	KEY SWITCH SIGNAL

Connector No.	M118
Connector Name	BCM (BODY CONTROL MODULE)
Connector Type	M03FB-LC

Terminal No.	Color of Wire	Signal Name [Specification]
1	W/B	BAT (F/L)

Connector No.	M119
Connector Name	BCM (BODY CONTROL MODULE)
Connector Type	NS16FW-CS

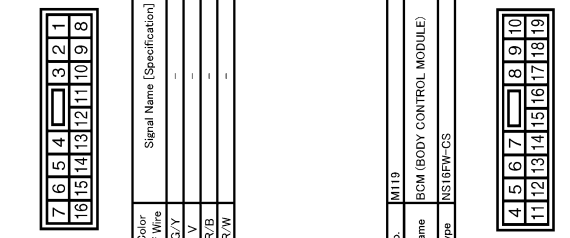

Terminal No.	Color of Wire	Signal Name [Specification]
5	G/Y	PASSENGER DOOR UNLOCK OUTPUT
8	V	ALL DOOR LOCK OUTPUT
9	G	DRIVER DOOR UNLOCK OUTPUT
10	G/Y	REAR DOOR UNLOCK OUTPUT
11	Y/R	BAT (FUSE)
13	B	GND

Connector No.	M121
Connector Name	BCM (BODY CONTROL MODULE)
Connector Type	TH40FGY-NH

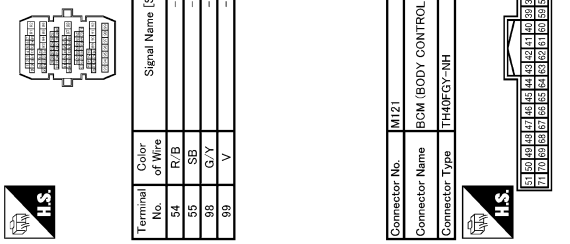

Terminal No.	Color of Wire	Signal Name [Specification]
68	R/W	REAR RH DOOR SW
69	R/B	REAR LH DOOR SW

JCKWM1185GE

POWER DOOR LOCK SYSTEM

Connector No.	M122
Connector Name	BCM (BODY CONTROL MODULE)
Connector Type	TH40FB-NH

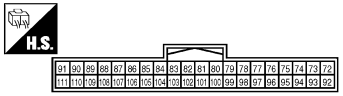

Terminal No.	Color of Wire	Signal Name [Specification]
90	P	CAN-L
91	L	CAN-H

Connector No.	M123
Connector Name	BCM (BODY CONTROL MODULE)
Connector Type	TH40FG-NH

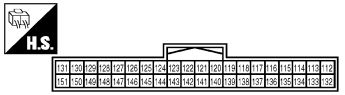

Terminal No.	Color of Wire	Signal Name [Specification]
119	G/W	DR DOOR UNLOCK SENSOR
121	Y	KEY SLOT SW
123	G/W	IGN F/B
124	R/B	PASSENGER DOOR SW
128	GR	CENTRAL LOCK SW
131	GR/R	CENTRAL UNLOCK SW
150	SB	DRIVER DOOR SW

Connector No.	M154
Connector Name	WIRE TO WIRE
Connector Type	NS16MW-CS

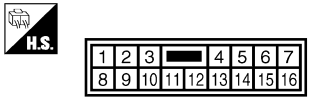

Terminal No.	Color of Wire	Signal Name [Specification]
6	V	–
7	G/Y	–

Connector No.	M155
Connector Name	WIRE TO WIRE
Connector Type	NS16MW-CS

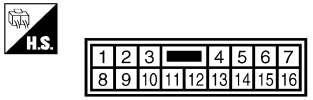

Terminal No.	Color of Wire	Signal Name [Specification]
2	GR	–
3	B/P	–
5	G/W	–
6	V	–
7	G	–
9	GR/R	–

JCKWM1186GE

INTELLIGENT KEY SYSTEM

Wiring Diagram - INTELLIGENT KEY SYSTEM -

INFOID:0000000003940918

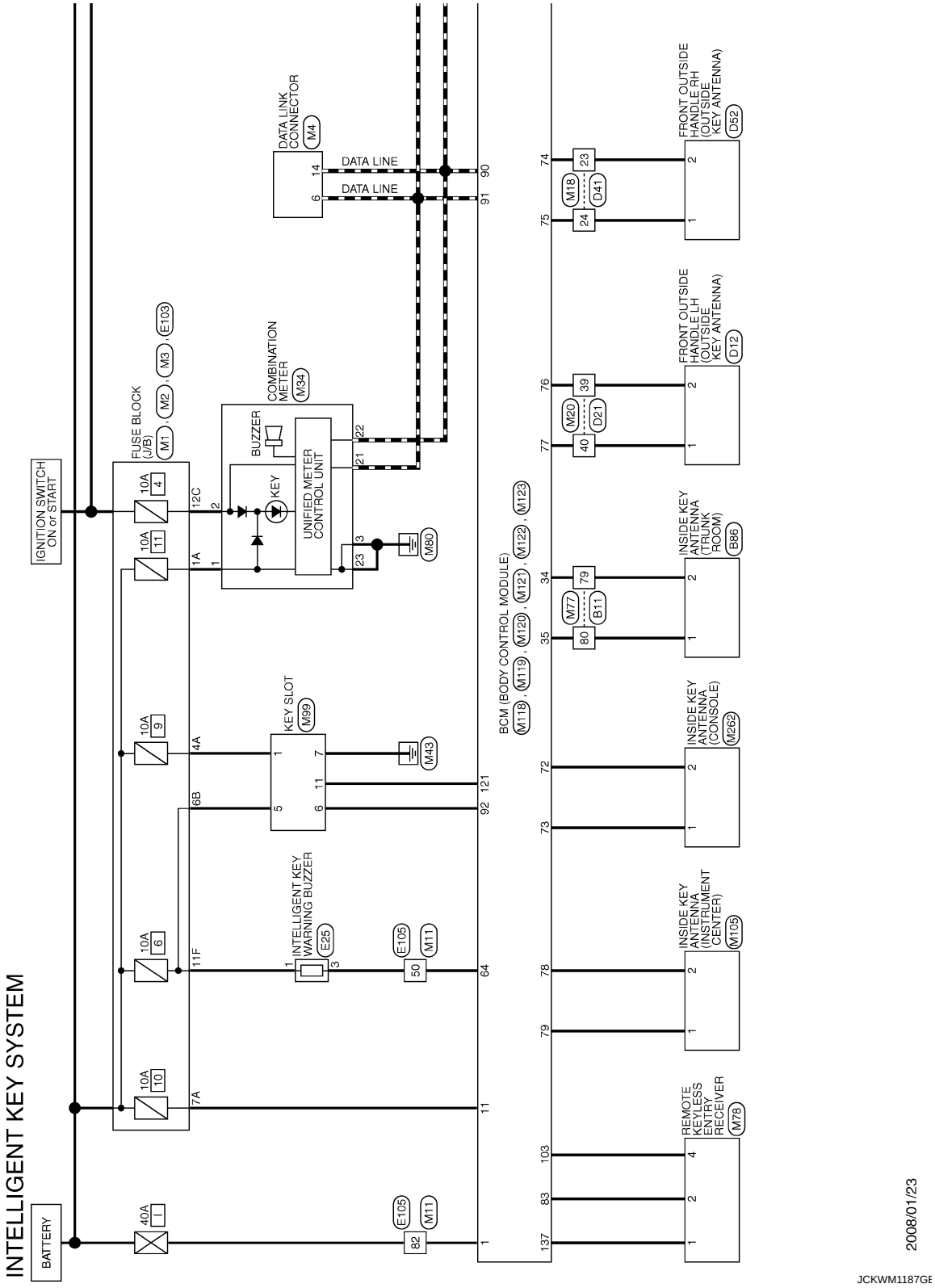

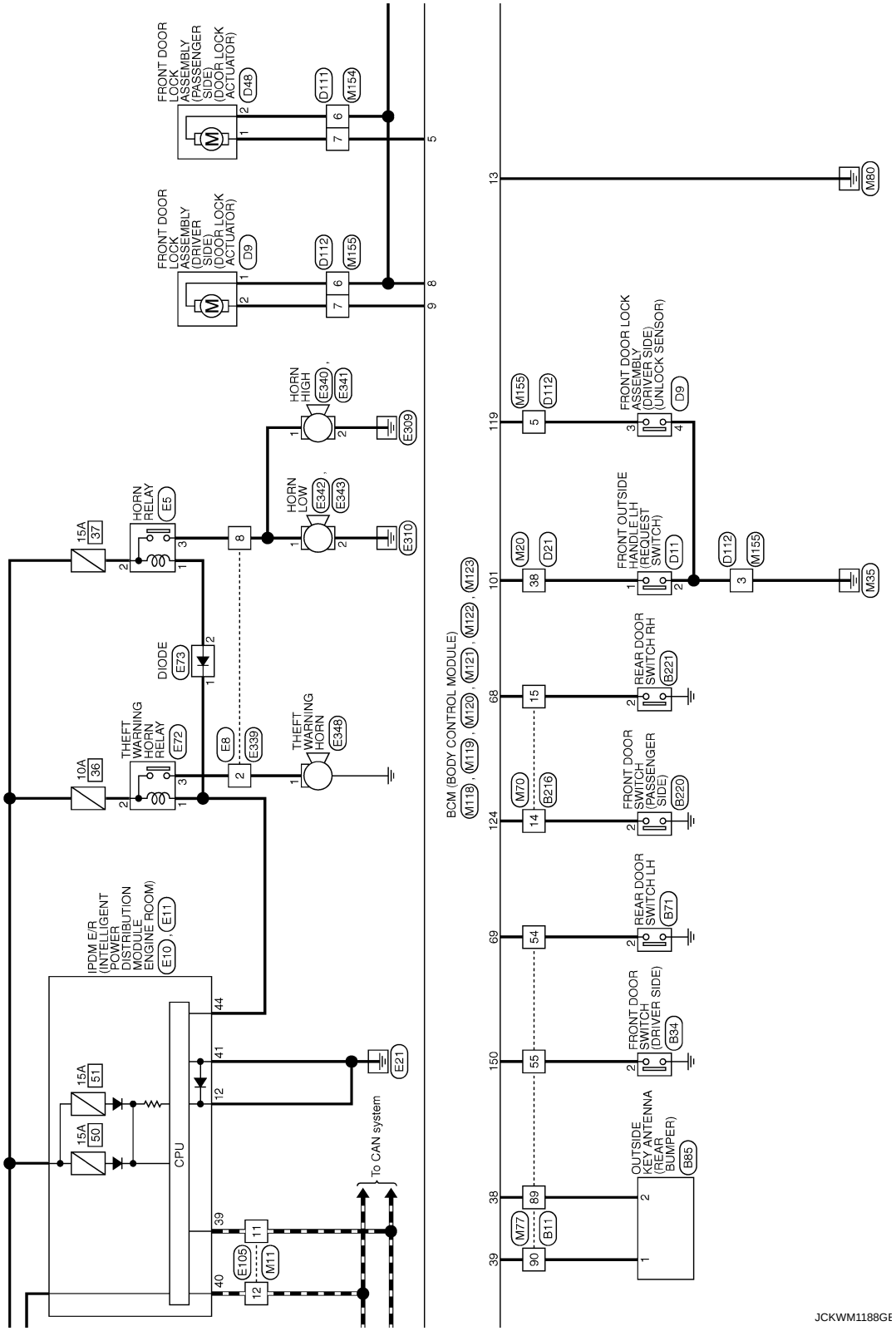
FRONT DOOR LOCK ASSEMBLY (PASSENGER SIDE) (DOOR LOCK ACTUATOR)
D48
D111
M154
FRONT DOOR LOCK ASSEMBLY (DRIVER SIDE) (DOOR LOCK ACTUATOR)
D9
D112
M155
HORN HIGH
E340
E341
E309
HORN LOW
E342
E343
E310
HORN RELAY
E5
15A
37
DIODE
E73
THEFT WARNING HORN RELAY
E72
10A
36
E8
E339
THEFT WARNING HORN
E348
IPDM E/R (INTELLIGENT POWER DISTRIBUTION MODULE ENGINE ROOM)
E10
E11
15A
51
15A
50
CPU
E21
To CAN system
E105
M11
M77
B11
BCM (BODY CONTROL MODULE)
M118
M119
M120
M121
M122
M123
M20
D21
M70
B216
M155
D112
FRONT DOOR LOCK ASSEMBLY (DRIVER SIDE) (UNLOCK SENSOR)
D9
FRONT OUTSIDE HANDLE LH (REQUEST SWITCH)
D11
REAR DOOR SWITCH RH
B221
FRONT DOOR SWITCH (PASSENGER SIDE)
B220
REAR DOOR SWITCH LH
B71
FRONT DOOR SWITCH (DRIVER SIDE)
B34
OUTSIDE KEY ANTENNA (REAR BUMPER)
B85
M35
M80
JCKWM1188GE

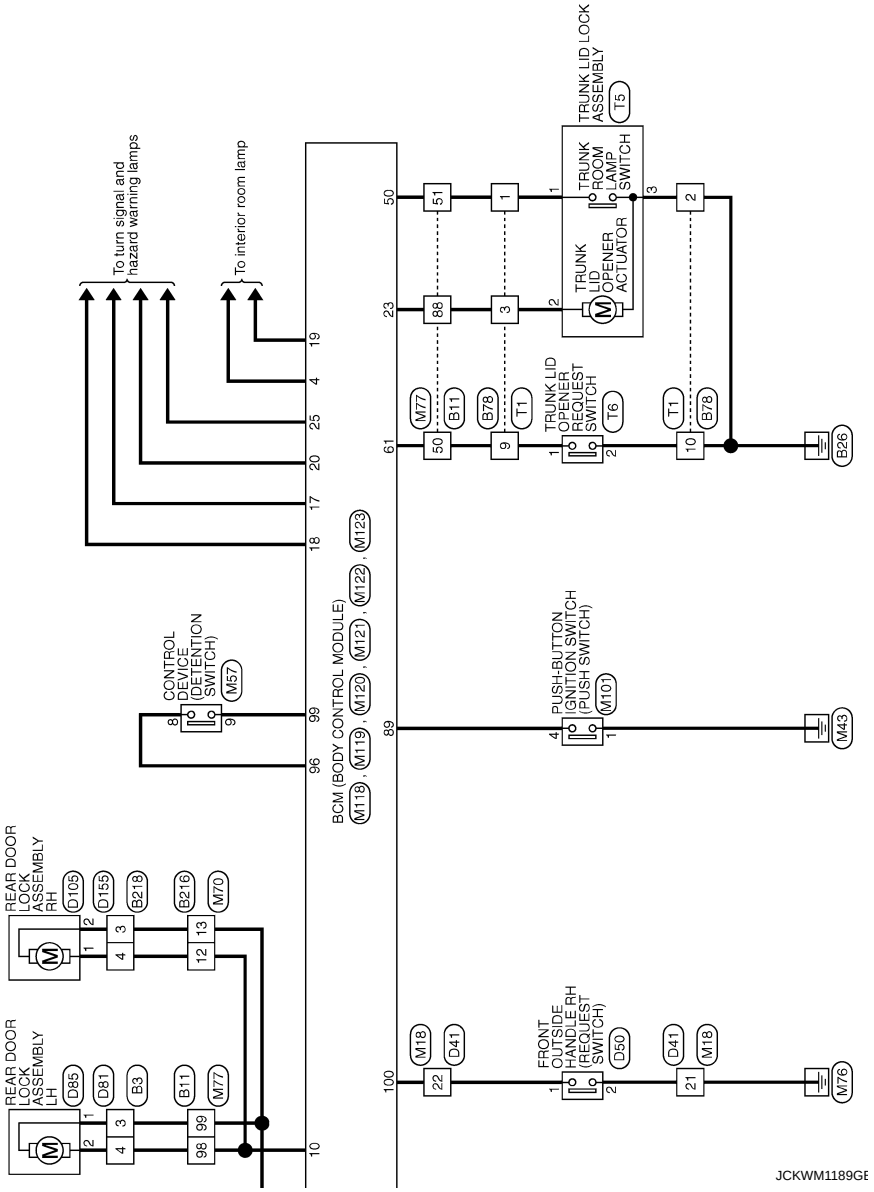
REAR DOOR LOCK ASSEMBLY LH
REAR DOOR LOCK ASSEMBLY RH
CONTROL DEVICE (DETENTION SWITCH)
BCM (BODY CONTROL MODULE)
To turn signal and hazard warning lamps
To interior room lamp
TRUNK LID OPENER ACTUATOR
TRUNK ROOM LAMP SWITCH
TRUNK LID LOCK ASSEMBLY
TRUNK LID OPENER REQUEST SWITCH
PUSH-BUTTON IGNITION SWITCH (PUSH SWITCH)
FRONT OUTSIDE HANDLE RH (REQUEST SWITCH)
JCKWM1189GE

INTELLIGENT KEY SYSTEM

Connector No.	B3
Connector Name	WIRE TO WIRE
Connector Type	NS10MW-CS

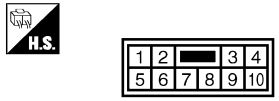

Terminal No.	Color of Wire	Signal Name [Specification]
3	V	–
4	G	–

Connector No.	B11
Connector Name	WIRE TO WIRE
Connector Type	TH80MW-CS19

Terminal No.	Color of Wire	Signal Name [Specification]
50	G	–
51	R	–
54	BR	–
55	SB	–
79	B	–
80	W	–
88	V	–
89	G	–
90	R	–
98	G	–
99	V	–

Connector No.	B34
Connector Name	FRONT DOOR SWITCH (DRIVER SIDE)
Connector Type	A03FW

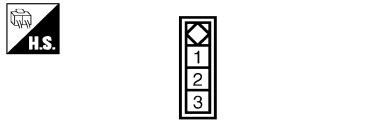

Terminal No.	Color of Wire	Signal Name [Specification]
2	SB	–

Connector No.	B71
Connector Name	REAR DOOR SWITCH LH
Connector Type	A03FW

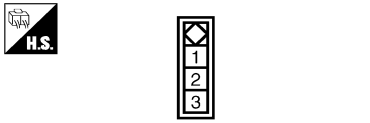

Terminal No.	Color of Wire	Signal Name [Specification]
2	BR	–

Connector No.	B78
Connector Name	WIRE TO WIRE
Connector Type	NS12MW-CS

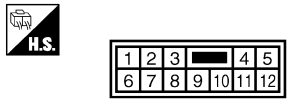

Terminal No.	Color of Wire	Signal Name [Specification]
1	R	–
2	B/R	–
3	V	–
9	G	–
10	B/Y	–

Connector No.	B85
Connector Name	OUTSIDE KEY ANTENNA (REAR BUMPER)
Connector Type	RK02FGY

Terminal No.	Color of Wire	Signal Name [Specification]
1	R	–
2	G	–

Connector No.	B86
Connector Name	INSIDE KEY ANTENNA (TRUNK ROOM)
Connector Type	RK02FGY

Terminal No.	Color of Wire	Signal Name [Specification]
1	W	–
2	B	–

Connector No.	B216
Connector Name	WIRE TO WIRE
Connector Type	NS16MBR-CS

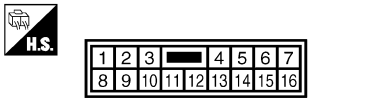

Terminal No.	Color of Wire	Signal Name [Specification]
12	G	–
13	V	–
14	R	–
15	W	–

JCKWM1190GE

INTELLIGENT KEY SYSTEM

Connector No.	B218
Connector Name	WIRE TO WIRE
Connector Type	NS10MW-CS

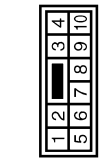

Terminal No.	Color of Wire	Signal Name [Specification]
3	V	–
4	G	–

Connector No.	B220
Connector Name	FRONT DOOR SWITCH (PASSENGER SIDE)
Connector Type	A03FW

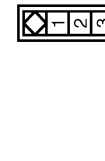

Terminal No.	Color of Wire	Signal Name [Specification]
2	R	–

Connector No.	B221
Connector Name	REAR DOOR SWITCH RH
Connector Type	A03FW

Terminal No.	Color of Wire	Signal Name [Specification]
2	W	–

Connector No.	D9
Connector Name	FRONT DOOR LOCK ASSEMBLY (DRIVER SIDE)
Connector Type	E06FGY-RS

Terminal No.	Color of Wire	Signal Name [Specification]
1	R	–
2	L	–
3	O	–
4	B	–

Connector No.	D11
Connector Name	FRONT OUTSIDE HANDLE LH (REQUEST SWITCH)
Connector Type	RH02FB

Terminal No.	Color of Wire	Signal Name [Specification]
1	R	–
2	B	–

Connector No.	D12
Connector Name	FRONT OUTSIDE HANDLE LH (OUTSIDE KEY ANTENNA)
Connector Type	RK02MGY

Terminal No.	Color of Wire	Signal Name [Specification]
1	P	–
2	V	–

Connector No.	D21
Connector Name	WIRE TO WIRE
Connector Type	TH40FW-NH

Terminal No.	Color of Wire	Signal Name [Specification]
38	R	–
39	V	–
40	P	–

Connector No.	D41
Connector Name	WIRE TO WIRE
Connector Type	TH24FW-NH

Terminal No.	Color of Wire	Signal Name [Specification]
21	B	–
22	R	–
23	V	–
24	P	–

JCKWM1191GE

INTELLIGENT KEY SYSTEM

Connector No.	D48
Connector Name	FRONT DOOR LOCK ASSEMBLY (PASSENGER SIDE)
Connector Type	E06FGY-RS

H.S.

Terminal No.	Color of Wire	Signal Name [Specification]
1	L	–
2	V	–

Connector No.	D50
Connector Name	FRONT OUTSIDE HANDLE RH (REQUEST SWITCH)
Connector Type	RH02FB

H.S.

Terminal No.	Color of Wire	Signal Name [Specification]
1	R	–
2	B	–

Connector No.	D52
Connector Name	FRONT OUTSIDE HANDLE RH (OUTSIDE KEY ANTENNA)
Connector Type	RK02MGY

H.S.

Terminal No.	Color of Wire	Signal Name [Specification]
1	P	–
2	V	–

Connector No.	D81
Connector Name	WIRE TO WIRE
Connector Type	NS10FW-CS

H.S.

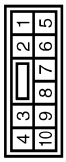

Terminal No.	Color of Wire	Signal Name [Specification]
3	V	–
4	G	–

Connector No.	D85
Connector Name	REAR DOOR LOCK ASSEMBLY LH
Connector Type	E06FGY-RS

H.S.

Terminal No.	Color of Wire	Signal Name [Specification]
1	V	–
2	G	–

Connector No.	D105
Connector Name	REAR DOOR LOCK ASSEMBLY RH
Connector Type	E06FGY-RS

H.S.

Terminal No.	Color of Wire	Signal Name [Specification]
1	G	–
2	V	–

Connector No.	D111
Connector Name	WIRE TO WIRE
Connector Type	NS16FW-CS

H.S.

Terminal No.	Color of Wire	Signal Name [Specification]
6	V	–
7	L	–

Connector No.	D112
Connector Name	WIRE TO WIRE
Connector Type	NS16FW-CS

H.S.

Terminal No.	Color of Wire	Signal Name [Specification]
3	B	–
5	O	–
6	R	–
7	L	–

JCKWM1192GE

INTELLIGENT KEY SYSTEM

Connector No.	D155
Connector Name	WIRE TO WIRE
Connector Type	NS10FW-CS

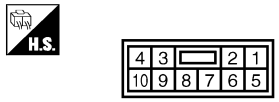

Terminal No.	Color of Wire	Signal Name [Specification]
3	V	–
4	G	–

Connector No.	E5
Connector Name	HORN RELAY
Connector Type	–

Terminal No.	Color of Wire	Signal Name [Specification]
1	W	–
2	SB	–
3	G	–

Connector No.	E8
Connector Name	WIRE TO WIRE
Connector Type	NS12MBR-CS

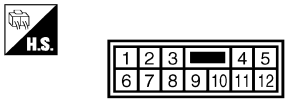

Terminal No.	Color of Wire	Signal Name [Specification]
2	R	–
8	G	–

Connector No.	E10
Connector Name	IPDM E/R (INTELLIGENT POWER DISTRIBUTION MODULE ENGINE ROOM)
Connector Type	TH20FW-CS12-M4-1V

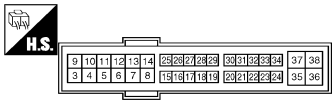

Terminal No.	Color of Wire	Signal Name [Specification]
12	B/W	–

Connector No.	E11
Connector Name	IPDM E/R (INTELLIGENT POWER DISTRIBUTION MODULE ENGINE ROOM)
Connector Type	TH08FW-NH

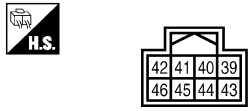

Terminal No.	Color of Wire	Signal Name [Specification]
39	P	–
40	L	–
41	B	–
44	G	–

Connector No.	E25
Connector Name	INTELLIGENT KEY WARNING BUZZER
Connector Type	RK03FBR

Terminal No.	Color of Wire	Signal Name [Specification]
1	G	–
3	GR	–

Connector No.	E72
Connector Name	THEFT WARNING HORN RELAY
Connector Type	M03FW-R-LC

Terminal No.	Color of Wire	Signal Name [Specification]
1	G	–
2	W	–
3	R	–

Connector No.	E73
Connector Name	DIODE
Connector Type	24335_C9902

Terminal No.	Color of Wire	Signal Name [Specification]
1	G	–
2	W	–

JCKWM1193GE

INTELLIGENT KEY SYSTEM

Connector No.	E103
Connector Name	FUSE BLOCK (J/B)
Connector Type	NS16FW-CS

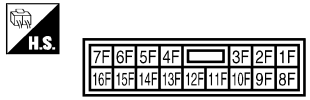

Terminal No.	Color of Wire	Signal Name [Specification]
11F	Y/B	–

Connector No.	E105
Connector Name	WIRE TO WIRE
Connector Type	TH70MW-CS10-M3

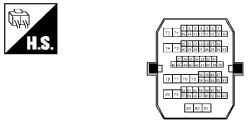

Terminal No.	Color of Wire	Signal Name [Specification]
11	P	–
12	L	–
50	GR	–
82	LG	–

Connector No.	E339
Connector Name	WIRE TO WIRE
Connector Type	NS12FBR-CS

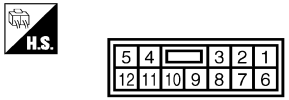

Terminal No.	Color of Wire	Signal Name [Specification]
2	R	–
8	G	–

Connector No.	E340
Connector Name	HORN HIGH
Connector Type	P01FB-A

Terminal No.	Color of Wire	Signal Name [Specification]
2	B	–

Connector No.	E341
Connector Name	HORN HIGH
Connector Type	P01FB-A

Terminal No.	Color of Wire	Signal Name [Specification]
1	G	–

Connector No.	E342
Connector Name	HORN LOW
Connector Type	P01FB-A

Terminal No.	Color of Wire	Signal Name [Specification]
2	B	–

Connector No.	E343
Connector Name	HORN LOW
Connector Type	P01FB-A

Terminal No.	Color of Wire	Signal Name [Specification]
1	G	–

Connector No.	E348
Connector Name	THEFT WARNING HORN
Connector Type	P01FB-A

Terminal No.	Color of Wire	Signal Name [Specification]
1	R	–

JCKWM1194GE

INTELLIGENT KEY SYSTEM

Connector No.	M1
Connector Name	FUSE BLOCK (J/B)
Connector Type	NS06FW-M2

Terminal No.	Color of Wire	Signal Name [Specification]
1A	W/L	–
4A	G/Y	–
7A	Y/R	–

Connector No.	M2
Connector Name	FUSE BLOCK (J/B)
Connector Type	NS10FW-CS

Terminal No.	Color of Wire	Signal Name [Specification]
6B	Y/R	–

Connector No.	M3
Connector Name	FUSE BLOCK (J/B)
Connector Type	NS12FW-CS

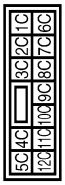

Terminal No.	Color of Wire	Signal Name [Specification]
12C	O	–

Connector No.	M4
Connector Name	DATA LINK CONNECTOR
Connector Type	BD16FW

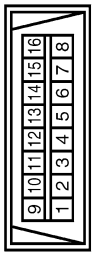

Terminal No.	Color of Wire	Signal Name [Specification]
6	L	–
14	P	–

Connector No.	M11
Connector Name	WIRE TO WIRE
Connector Type	TH70FW-CS10-M3

Terminal No.	Color of Wire	Signal Name [Specification]
11	P	–
12	L	–
50	GR	–
82	W/B	–

Connector No.	M18
Connector Name	WIRE TO WIRE
Connector Type	TH24MW-NH

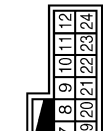

Terminal No.	Color of Wire	Signal Name [Specification]
21	B	–
22	P/L	–
23	B/Y	–
24	LG	–

Connector No.	M20
Connector Name	WIRE TO WIRE
Connector Type	TH40MW-NH

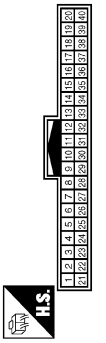

Terminal No.	Color of Wire	Signal Name [Specification]
38	B/W	–
39	V	–
40	P	–

Connector No.	M34
Connector Name	COMBINATION METER
Connector Type	TH40FW-NH

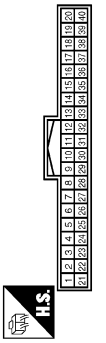

Terminal No.	Color of Wire	Signal Name [Specification]
1	W/L	BAT
2	O	IGN
3	B	GROUND
21	L	CAN-H
22	P	CAN-L
23	B	GROUND

JCKWM1195GE

INTELLIGENT KEY SYSTEM

Connector No.	M57
Connector Name	CONTROL DEVICE
Connector Type	TK10FW

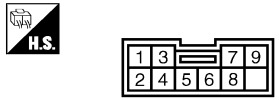

Terminal No.	Color of Wire	Signal Name [Specification]
8	Y/R	–
9	G/B	–

Connector No.	M70
Connector Name	WIRE TO WIRE
Connector Type	NS16FBR-CS

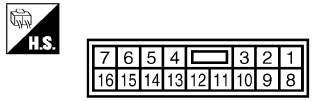

Terminal No.	Color of Wire	Signal Name [Specification]
12	G/Y	–
13	V	–
14	R/B	–
15	R/W	–

Connector No.	M77
Connector Name	WIRE TO WIRE
Connector Type	TH80FW-CS19

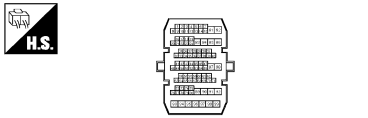

Terminal No.	Color of Wire	Signal Name [Specification]
50	G/R	–
51	W	–
54	R/B	–
55	SB	–
79	B	–
80	W	–
88	R	–
89	L/O	–
90	BR/W	–
98	G/Y	–
99	V	–

Connector No.	M78
Connector Name	REMOTE KEYLESS ENTRY RECEIVER
Connector Type	JAB04FB

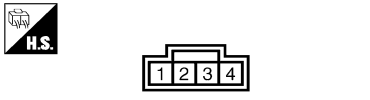

Terminal No.	Color of Wire	Signal Name [Specification]
1	P	GND
2	L/O	SIGNAL
4	L/R	+12V

Connector No.	M99
Connector Name	KEY SLOT
Connector Type	TH12FW-NH

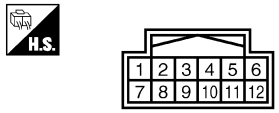

Terminal No.	Color of Wire	Signal Name [Specification]
1	G/Y	BAT
5	Y/R	ILL BAT
6	R/L	ILL
7	B	GND
11	Y	KEY SWITCH SIGNAL

Connector No.	M101
Connector Name	PUSH-BUTTON IGNITION SWITCH
Connector Type	TK08FBR

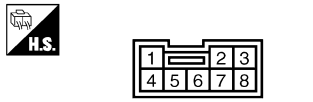

Terminal No.	Color of Wire	Signal Name [Specification]
1	B	–
4	BR	–

Connector No.	M105
Connector Name	INSIDE KEY ANTENNA (INSTRUMENT CENTER)
Connector Type	RK02FGY

Terminal No.	Color of Wire	Signal Name [Specification]
1	G	–
2	R	–

Connector No.	M118
Connector Name	BCM (BODY CONTROL MODULE)
Connector Type	M03FB-LC

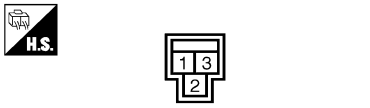

Terminal No.	Color of Wire	Signal Name [Specification]
1	W/B	BAT (F/L)

JCKWM1196GE

INTELLIGENT KEY SYSTEM

Connector No.	M119
Connector Name	BCM (BODY CONTROL MODULE)
Connector Type	NS16FW-CS

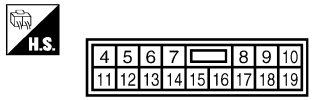

Terminal No.	Color of Wire	Signal Name [Specification]
4	P/W	INTERIOR ROOM LAMP POWER SUPPLY
5	G/Y	PASSENGER DOOR UNLOCK OUTPUT
8	V	ALL DOOR LOCK OUTPUT
9	G	DRIVER DOOR UNLOCK OUTPUT
10	G/Y	REAR DOOR UNLOCK OUTPUT
11	Y/R	BAT (FUSE)
13	B	GND
17	G/B	TURN SIGNAL RH (FRONT, D/MIRROR)
18	G/Y	TURN SIGNAL LH (FRONT, D/MIRROR)
19	Y	ROOM LAMP TIMER CONTROL

Connector No.	M120
Connector Name	BCM (BODY CONTROL MODULE)
Connector Type	NS12FW-CS

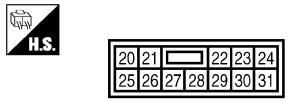

Terminal No.	Color of Wire	Signal Name [Specification]
20	G/B	TURN SIGNAL RH (REAR)
23	R	TRUNK OPEN OUTPUT
25	G/Y	TURN SIGNAL LH (REAR)

Connector No.	M121
Connector Name	BCM (BODY CONTROL MODULE)
Connector Type	TH40FGY-NH

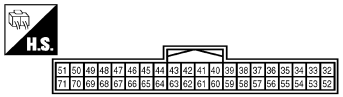

Terminal No.	Color of Wire	Signal Name [Specification]
34	B	TRUNK ANT 1 B
35	W	TRUNK ANT 1 A
38	L/O	RR BUMPER ANT B
39	BR/W	RR BUMPER ANT A
50	W	TRUNK SW
61	G/R	TRUNK REQUEST SW
64	GR	REQUEST SW BUZZER
68	R/W	REAR RH DOOR SW
69	R/B	REAR LH DOOR SW

Connector No.	M122
Connector Name	BCM (BODY CONTROL MODULE)
Connector Type	TH40FB-NH

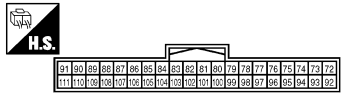

Terminal No.	Color of Wire	Signal Name [Specification]
72	B/R	ROOM ANT2-
73	W/R	ROOM ANT2+
74	B/Y	PASSENGER DOOR ANT-
75	LG	PASSENGER DOOR ANT+
76	V	DRIVER DOOR ANT-
77	P	DRIVER DOOR ANT+
78	R	ROOM ANT1-
79	G	ROOM ANT1+
83	L/O	KEYLESS ENTRY RECEIVER SIGNAL
89	BR	PUSH SW
90	P	CAN-L

91	L	CAN-H
92	R/L	FOB SLOT ILLUMINATION
96	Y/R	CONTROL DEVICE POWER SUPPLY
99	G/B	SHIFT P
100	P/L	PASSENGER DOOR REQUEST SW
101	B/W	DRIVER DOOR REQUEST SW
103	L/R	KEYLESS ENTRY RECEIVER POWER SUPPLY

Connector No.	M123
Connector Name	BCM (BODY CONTROL MODULE)
Connector Type	TH40FG-NH

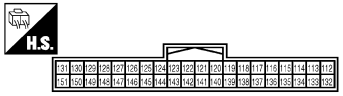

Terminal No.	Color of Wire	Signal Name [Specification]
119	G/W	DR DOOR UNLOCK SENSOR
121	Y	KEY SLOT SW
124	R/B	PASSENGER DOOR SW
137	P	RECEIVER/SENSOR GND
150	SB	DRIVER DOOR SW

Connector No.	M154
Connector Name	WIRE TO WIRE
Connector Type	NS16MW-CS

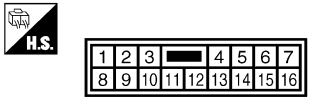

Terminal No.	Color of Wire	Signal Name [Specification]
6	V	-
7	G/Y	-

JCKWM1197GE

INTELLIGENT KEY SYSTEM

Connector No.	M155
Connector Name	WIRE TO WIRE
Connector Type	NS16MW-CS

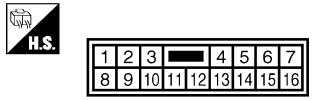

Terminal No.	Color of Wire	Signal Name [Specification]
3	B/P	–
5	G/W	–
6	V	–
7	G	–

Connector No.	M262
Connector Name	INSIDE KEY ANTENNA (CONSOLE)
Connector Type	RK02FGY

Terminal No.	Color of Wire	Signal Name [Specification]
1	W/R	–
2	B/R	–

Connector No.	T1
Connector Name	WIRE TO WIRE
Connector Type	NS12FW-CS

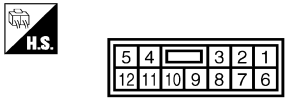

Terminal No.	Color of Wire	Signal Name [Specification]
1	W	–
2	B	–
3	R	–
9	BR	–
10	B	–

Connector No.	T5
Connector Name	TRUNK LID LOCK ASSEMBLY
Connector Type	TB03FW

Terminal No.	Color of Wire	Signal Name [Specification]
1	W	–
2	R	–
3	B	–

Connector No.	T6
Connector Name	TRUNK LID OPENER REQUEST SWITCH
Connector Type	TK02MBR-P

Terminal No.	Color of Wire	Signal Name [Specification]
1	BR	–
2	B	–

JCKWM1198GE

TRUNK LID OPENER

Wiring Diagram - TRUNK LID OPENER -

INFOID:0000000003940919

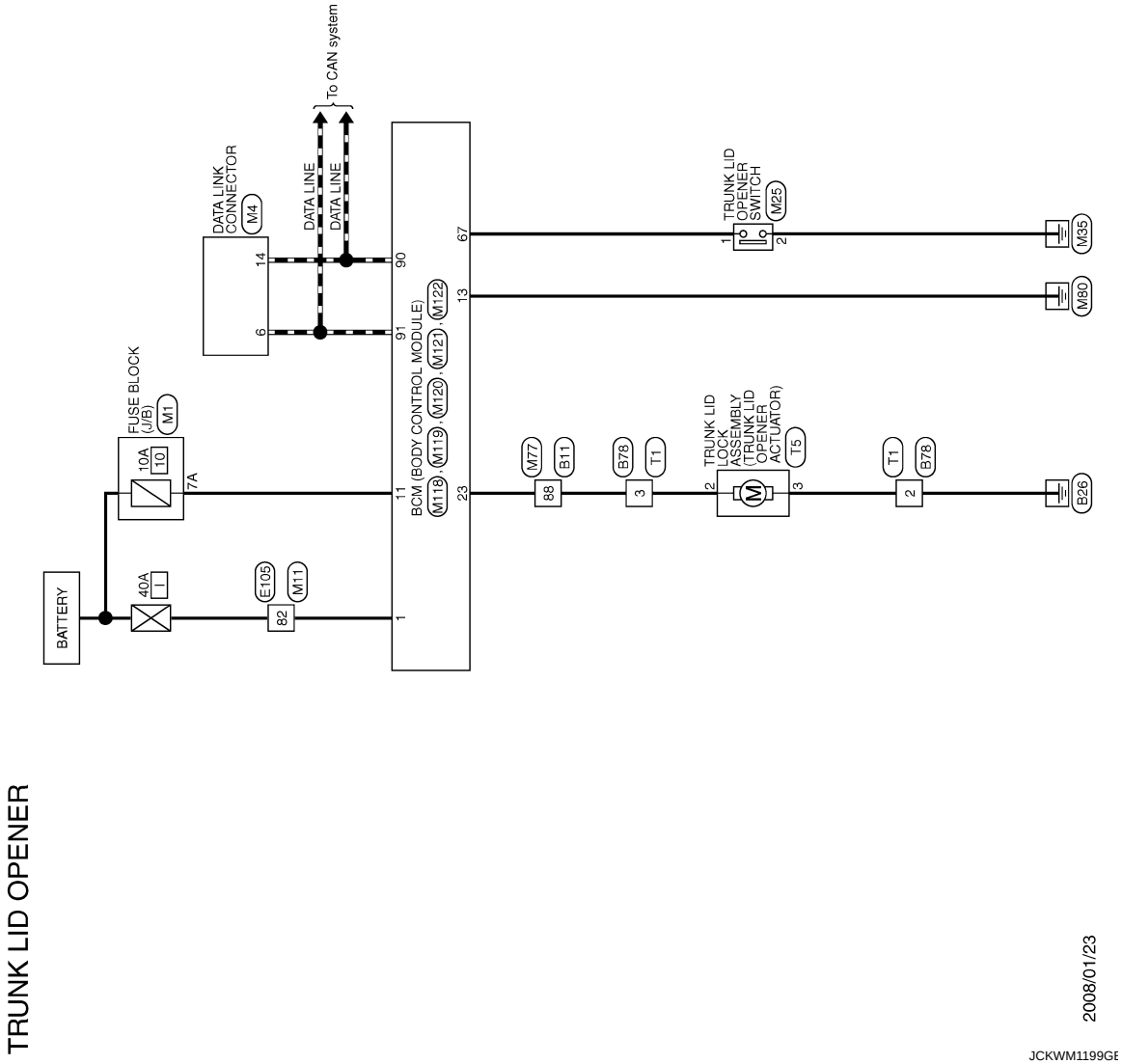

TRUNK LID OPENER

Connector No.	B11
Connector Name	WIRE TO WIRE
Connector Type	TH80MW-CS19

H.S.

Terminal No.	Color of Wire	Signal Name [Specification]
88	V	–

Connector No.	B78
Connector Name	WIRE TO WIRE
Connector Type	NS12MW-CS

H.S.

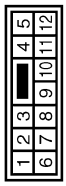

Terminal No.	Color of Wire	Signal Name [Specification]
2	B/R	–
3	V	–

Connector No.	E105
Connector Name	WIRE TO WIRE
Connector Type	TH70MW-CS10-M3

H.S.

Terminal No.	Color of Wire	Signal Name [Specification]
82	LG	–

Connector No.	M1
Connector Name	FUSE BLOCK (J/B)
Connector Type	NS06FW-M2

H.S.

Terminal No.	Color of Wire	Signal Name [Specification]
7A	Y/R	–

Connector No.	M4
Connector Name	DATA LINK CONNECTOR
Connector Type	BD16FW

H.S.

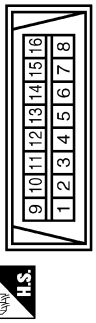

Terminal No.	Color of Wire	Signal Name [Specification]
6	L	–
14	P	–

Connector No.	M11
Connector Name	WIRE TO WIRE
Connector Type	TH70FW-CS10-M3

H.S.

Terminal No.	Color of Wire	Signal Name [Specification]
82	W/B	–

Connector No.	M25
Connector Name	TRUNK LID OPENER SWITCH
Connector Type	TK04FW

H.S.

Terminal No.	Color of Wire	Signal Name [Specification]
1	L/R	–
2	B	–

Connector No.	M77
Connector Name	WIRE TO WIRE
Connector Type	TH80FW-CS19

H.S.

Terminal No.	Color of Wire	Signal Name [Specification]
88	R	–

JCKWM1200GE

TRUNK LID OPENER

Connector No.	M118
Connector Name	BCM (BODY CONTROL MODULE)
Connector Type	M03FB-LC

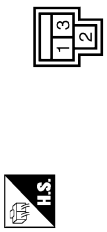

Terminal No.	Color of Wire	Signal Name [Specification]
1	W/B	BAT (F/L)

Connector No.	M119
Connector Name	BCM (BODY CONTROL MODULE)
Connector Type	NS16FW-CS

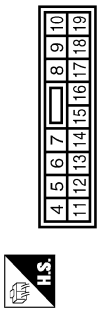

Terminal No.	Color of Wire	Signal Name [Specification]
11	Y/R	BAT (FUSE)
13	B	GND

Connector No.	M120
Connector Name	BCM (BODY CONTROL MODULE)
Connector Type	NS12FW-CS

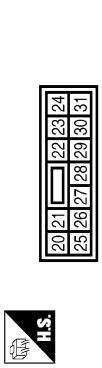

Terminal No.	Color of Wire	Signal Name [Specification]
23	R	TRUNK OPEN OUTPUT

Connector No.	M121
Connector Name	BCM (BODY CONTROL MODULE)
Connector Type	TH40FGY-NH

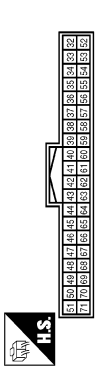

Terminal No.	Color of Wire	Signal Name [Specification]
67	L/R	INTERIOR TRUNK SW

Connector No.	M122
Connector Name	BCM (BODY CONTROL MODULE)
Connector Type	TH40FB-NH

Terminal No.	Color of Wire	Signal Name [Specification]
90	P	CAN-L
91	L	CAN-H

Connector No.	T1
Connector Name	WIRE TO WIRE
Connector Type	NS12FW-CS

Terminal No.	Color of Wire	Signal Name [Specification]
2	B	–
3	R	–

Connector No.	T5
Connector Name	TRUNK LID LOCK ASSEMBLY
Connector Type	TB03FW

Terminal No.	Color of Wire	Signal Name [Specification]
2	R	–
3	B	–

JCKWM1201GE

FUEL FILLER LID OPENER

Wiring Diagram - FUEL LID OPENER -

INFOID:0000000003794970

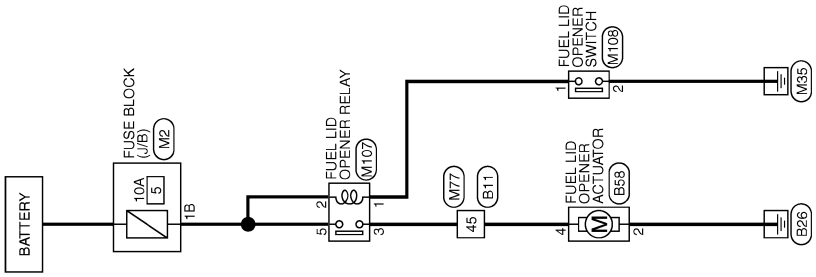

FUEL LID OPENER

2008/01/23

JCKWM1202GE

FUEL LID OPENER

Connector No.	B11
Connector Name	WIRE TO WIRE
Connector Type	TH80MW-CS19

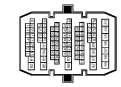

Terminal No.	Color of Wire	Signal Name [Specification]
45	L	–

Connector No.	B58
Connector Name	FUEL LID OPENER ACTUATOR
Connector Type	M04FW-LC

Terminal No.	Color of Wire	Signal Name [Specification]
2	B	–
4	L	–

Connector No.	M2
Connector Name	FUSE BLOCK (J/B)
Connector Type	NS10FW-CS

Terminal No.	Color of Wire	Signal Name [Specification]
1B	G/W	–

Connector No.	M77
Connector Name	WIRE TO WIRE
Connector Type	TH80FW-CS19

Terminal No.	Color of Wire	Signal Name [Specification]
45	Y/B	–

Connector No.	M107
Connector Name	FUEL LID OPENER RELAY
Connector Type	MS02FL-M2-LC

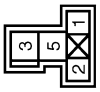

Terminal No.	Color of Wire	Signal Name [Specification]
1	L/R	–
2	G/W	–
3	Y/B	–
5	G/W	–

Connector No.	M108
Connector Name	FUEL LID OPENER SWITCH
Connector Type	TK06FGY

Terminal No.	Color of Wire	Signal Name [Specification]
1	L/R	–
2	B	–

JCKWM1203GE

ECU DIAGNOSIS

BCM (BODY CONTROL MODULE)

Reference Value

INFOID:0000000003904112

VALUES ON THE DIAGNOSIS TOOL

CONSULT-III MONITOR ITEM

Monitor Item	Condition	Value/Status
FR WIPER HI	Other than front wiper switch HI	Off
	Front wiper switch HI	On
FR WIPER LOW	Other than front wiper switch LO	Off
	Front wiper switch LO	On
FR WASHER SW	Front washer switch OFF	Off
	Front washer switch ON	On
FR WIPER INT	Other than front wiper switch INT	Off
	Front wiper switch INT	On
FR WIPER STOP	Front wiper is not in STOP position	Off
	Front wiper is in STOP position	On
INT VOLUME	Wiper intermittent dial is in a dial position 1 - 7	Wiper intermittent dial position
TURN SIGNAL R	Other than turn signal switch RH	Off
	Turn signal switch RH	On
TURN SIGNAL L	Other than turn signal switch LH	Off
	Turn signal switch LH	On
TAIL LAMP SW	Other than lighting switch 1ST and 2ND	Off
	Lighting switch 1ST or 2ND	On
HI BEAM SW	Other than lighting switch HI	Off
	Lighting switch HI	On
HEAD LAMP SW 1	Other than lighting switch 2ND	Off
	Lighting switch 2ND	On
HEAD LAMP SW 2	Other than lighting switch 2ND	Off
	Lighting switch 2ND	On
PASSING SW	Other than lighting switch PASS	Off
	Lighting switch PASS	On
AUTO LIGHT SW	Other than lighting switch AUTO	Off
	Lighting switch AUTO	On
FR FOG SW	Front fog lamp switch OFF	Off
	Front fog lamp switch ON	On
RR FOG SW	Rear fog lamp switch OFF	Off
	Rear fog lamp switch ON	On
DOOR SW-DR	Driver door closed	Off
	Driver door opened	On
DOOR SW-AS	Passenger door closed	Off
	Passenger door opened	On
DOOR SW-RR	Rear RH door closed	Off
	Rear RH door opened	On

Monitor Item	Condition	Value/Status
DOOR SW-RL	Rear LH door closed	Off
	Rear LH door opened	On
DOOR SW-BK	**NOTE:** The item is indicated, but not monitored.	Off
CDL LOCK SW	Other than power door lock switch LOCK	Off
	Power door lock switch LOCK	On
CDL UNLOCK SW	Other than power door lock switch UNLOCK	Off
	Power door lock switch UNLOCK	On
KEY CYL LK-SW	**NOTE:** The item is indicated, but not monitored.	Off
KEY CYL UN-SW	**NOTE:** The item is indicated, but not monitored.	Off
KEY CYL SW-TR	**NOTE:** The item is indicated, but not monitored.	Off
HAZARD SW	Hazard switch is OFF	Off
	Hazard switch is ON	On
REAR DEF SW **NOTE:** At model with BOSE audio system this item is indicated, but is not monitored.	Rear window defogger switch is OFF	Off
	Rear window defogger switch is ON	On
TR CANCEL SW	**NOTE:** The item is indicated, but not monitored.	Off
TR/BD OPEN SW	Trunk lid opener switch OFF	Off
	While the trunk lid opener switch is turned ON	On
TRNK/HAT MNTR	Trunk lid closed	Off
	Trunk lid opened	On
RKE-LOCK	LOCK button of the key is not pressed	Off
	LOCK button of the key is pressed	On
RKE-UNLOCK	UNLOCK button of the key is not pressed	Off
	UNLOCK button of the key is pressed	On
RKE-TR/BD	TRUNK OPEN button of the key is not pressed	Off
	TRUNK OPEN button of the key is pressed	On
RKE-PANIC	**NOTE:** The item is indicated, but not monitored.	Off
RKE-P/W OPEN	**NOTE:** The item is indicated, but not monitored.	Off
RKE-MODE CHG	LOCK/UNLOCK button of the key is not pressed and held simultaneously	Off
	LOCK/UNLOCK button of the key is pressed and held simultaneously	On
OPTICAL SENSOR	Bright outside of the vehicle	Close to 5 V
	Dark outside of the vehicle	Close to 0 V
REQ SW -DR	Driver door request switch is not pressed	Off
	Driver door request switch is pressed	On
REQ SW -AS	Passenger door request switch is not pressed	Off
	Passenger door request switch is pressed	On

Monitor Item	Condition	Value/Status
REQ SW -RR	**NOTE:** The item is indicated, but not monitored.	Off
REQ SW -RR	**NOTE:** The item is indicated, but not monitored.	Off
REQ SW -BD/TR	Trunk lid opener request switch is not pressed	Off
	Trunk lid opener request switch is pressed	On
PUSH SW	Push-button ignition switch (push switch) is not pressed	Off
	Push-button ignition switch (push switch) is pressed	On
IGN RLY2 -F/B	Ignition switch in OFF or ACC position	Off
	Ignition switch in ON position	On
CLUCH SW	**NOTE:** The item is indicated, but not monitored.	Off
BRAKE SW 1	The brake pedal is not depressed	On
	The brake pedal is depressed	Off
DETE/CANCL SW	Selector lever in P position	Off
	Selector lever in any position other than P	On
SFT PN/N SW	Selector lever in any position other than P and N	Off
	Selector lever in P or N position	On
S/L -LOCK	Steering is locked	Off
	Steering is unlocked	On
S/L -UNLOCK	Steering is unlocked	Off
	Steering is locked	On
S/L RELAY-F/B	Ignition switch in OFF or ACC position	Off
	Ignition switch in ON position	On
UNLK SEN -DR	Driver door is unlocked	Off
	Driver door is locked	On
PUSH SW -IPDM	Push-button ignition switch (push-switch) is not pressed	Off
	Push-button ignition switch (push-switch) is pressed	On
IGN RLY1 -F/B	Ignition switch in OFF or ACC position	Off
	Ignition switch in ON position	On
DETE SW -IPDM	Selector lever in P position	Off
	Selector lever in any position other than P	On
SFT PN -IPDM	Selector lever in any position other than P and N	Off
	Selector lever in P or N position	On
SFT P -MET	Selector lever in any position other than P	Off
	Selector lever in P position	On
SFT N -MET	Selector lever in any position other than N	Off
	Selector lever in N position	On
ENGINE STATE	Engine stopped	Stop
	While the engine stalls	Stall
	At engine cranking	Crank
	Engine running	Run
S/L LOCK-IPDM	Steering is locked	Off
	Steering is unlocked	On

Monitor Item	Condition	Value/Status
S/L UNLK-IPDM	Steering is unlocked	Off
	Steering is locked	On
S/L RELAY-REQ	Ignition switch in OFF or ACC position	Off
	Ignition switch in ON position	On
VEH SPEED 1	While driving	Equivalent to speedometer reading
VEH SPEED 2	While driving	Equivalent to speedometer reading
DOOR STAT-DR	Driver door is locked	LOCK
	Wait with selective UNLOCK operation (5 seconds)	READY
	Driver door is unlocked	UNLOCK
DOOR STAT-AS	Passenger door is locked	LOCK
	Wait with selective UNLOCK operation (5 seconds)	READY
	Passenger door is unlocked	UNLOCK
ID OK FLAG	Ignition switch in ACC or ON position	Reset
	Ignition switch in OFF position	Set
PRMT ENG STRT	The engine start is prohibited	Reset
	The engine start is permitted	Set
PRMT RKE STRT	**NOTE:** The item is indicated, but not monitored.	Reset
KEY SW -SLOT	The key is not inserted into key slot	Off
	The key is inserted into key slot	On
RKE OPE COUN1	During the operation of the key	Operation frequency of the key
RKE OPE COUN2	**NOTE:** The item is indicated, but not monitored.	—
CONFRM ID ALL	The key ID that the key slot receives does not accord with any key ID registered to BCM.	Yet
	The key ID that the key slot receives accords with any key ID registered to BCM.	Done
CONFIRM ID4	The key ID that the key slot receives does not accord with the fourth key ID registered to BCM.	Yet
	The key ID that the key slot receives accords with the fourth key ID registered to BCM.	Done
CONFIRM ID3	The key ID that the key slot receives does not accord with the third key ID registered to BCM.	Yet
	The key ID that the key slot receives accords with the third key ID registered to BCM.	Done
CONFIRM ID2	The key ID that the key slot receives does not accord with the second key ID registered to BCM.	Yet
	The key ID that the key slot receives accords with the second key ID registered to BCM.	Done
CONFIRM ID1	The key ID that the key slot receives does not accord with the first key ID registered to BCM.	Yet
	The key ID that the key slot receives accords with the first key ID registered to BCM.	Done
TP 4	The ID of fourth key is not registered to BCM	Yet
	The ID of fourth key is registered to BCM	Done
TP 3	The ID of third key is not registered to BCM	Yet
	The ID of third key is registered to BCM	Done

Monitor Item	Condition	Value/Status
TP 2	The ID of second key is not registered to BCM	Yet
	The ID of second key is registered to BCM	Done
TP 1	The ID of first key is not registered to BCM	Yet
	The ID of first key is registered to BCM	Done

TERMINAL LAYOUT

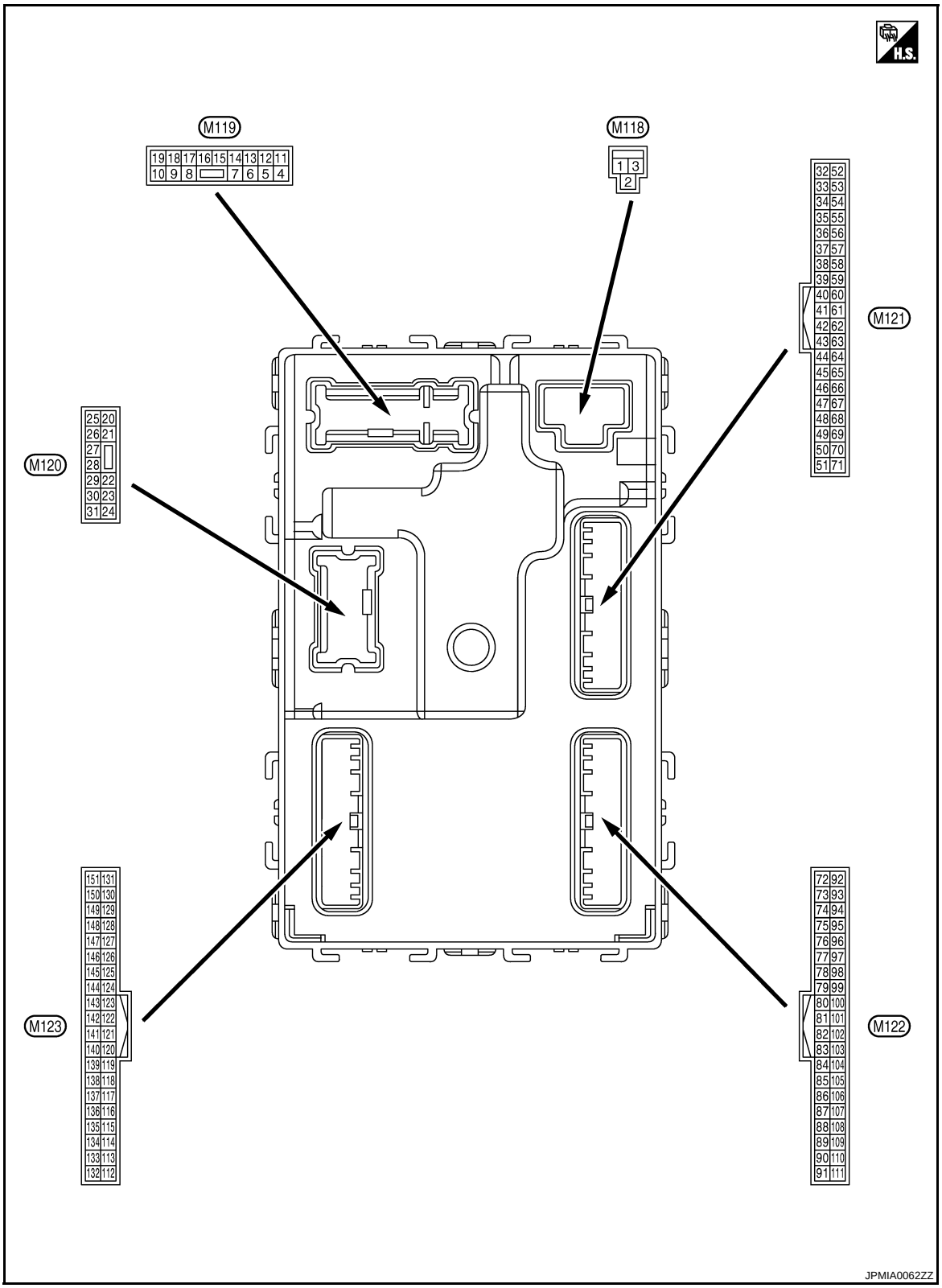

PHYSICAL VALUES

Terminal No. (Wire color)		Description		Condition		Value (Approx.)
+	–	Signal name	Input/ Output			
1 (W/B)	Ground	Battery power supply	Input	Ignition switch OFF		Battery voltage
2 (R/Y)	Ground	P/W power supply (BAT)	Output	Ignition switch OFF		Battery voltage
3 (L/W)	Ground	P/W power supply (IGN)	Output	Ignition switch ON		Battery voltage
4 (P/W)	Ground	Interior room lamp power supply	Output	Interior room lamp battery saver is activated. (Cuts the interior room lamp power supply)		0 V
				Interior room lamp battery saver is not activated. (Outputs the interior room lamp power supply)		Battery voltage
5 (G/Y)	Ground	Passenger door UNLOCK	Output	Passenger door	UNLOCK (Actuator is activated)	Battery voltage
					Other than UNLOCK (Actuator is not activated)	0 V
7 (R/W)	Ground	Step lamp	Output	Step lamp	ON	0 V
					OFF	Battery voltage
8 (V)	Ground	All doors LOCK	Output	All doors	LOCK (Actuator is activated)	Battery voltage
					Other than LOCK (Actuator is not activated)	0 V
9 (G)	Ground	Driver door UNLOCK	Output	Driver door	UNLOCK (Actuator is activated)	Battery voltage
					Other than UNLOCK (Actuator is not activated)	0 V
10 (G/Y)	Ground	Rear RH door and rear LH door UNLOCK	Output	Rear RH door and rear LH door	UNLOCK (Actuator is activated)	Battery voltage
					Other than UNLOCK (Actuator is not activated)	0 V
11 (Y/R)	Ground	Battery power supply	Input	Ignition switch OFF		Battery voltage
13 (B)	Ground	Ground	—	Ignition switch ON		0 V
15 (Y)	Ground	ACC indicator lamp	Output	Ignition switch	OFF (LOCK indicator is not illuminated)	Battery voltage
					ACC or ON	0 V
17 (G/B)	Ground	Turn signal RH (Front and door mirror)	Output	Ignition switch ON	Turn signal switch OFF	0 V
					Turn signal switch RH	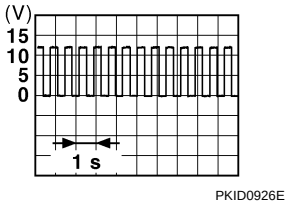 6.5 V

Terminal No. (Wire color)		Description		Condition		Value (Approx.)
+	–	Signal name	Input/ Output			
18 (G/Y)	Ground	Turn signal LH (Front and door mirror)	Output	Ignition switch ON	Turn signal switch OFF	0 V
					Turn signal switch LH	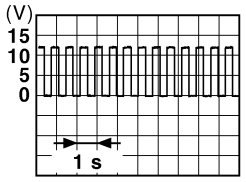 PKID0926E 6.5 V
19 (Y)	Ground	Room lamp timer control	Output	Interior room lamp	OFF	Battery voltage
					ON	0 V
20 (G/B)	Ground	Turn signal RH (Rear)	Output	Ignition switch ON	Turn signal switch OFF	0 V
					Turn signal switch RH	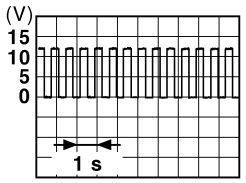 PKID0926E 6.5 V
23 (R)	Ground	Trunk lid opening	Output	Trunk lid	OPEN (Trunk lid opener actuator is activated)	Battery voltage
					Other than OPEN (Trunk lid opener actuator is not activated)	0 V
24 (G)	Ground	Rear fog lamp	Output	Rear fog lamp	OFF	0 V
					ON	Battery voltage
25 (G/Y)	Ground	Turn signal LH (Rear)	Output	Ignition switch ON	Turn signal switch OFF	0 V
					Turn signal switch LH	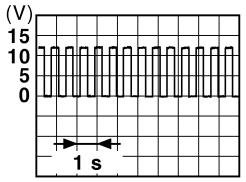 PKID0926E 6.5 V
30 (V/W)	Ground	Trunk room lamp	Output	Trunk room lamp	OFF	0 V
					ON	Battery voltage

Terminal No. (Wire color)		Description		Condition		Value (Approx.)
+	–	Signal name	Input/ Output			
34 (B)	Ground	Trunk room antenna (-)	Output	Ignition switch OFF	When Intelligent Key is in the passenger compartment	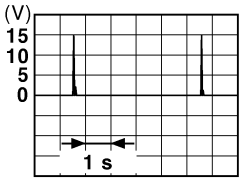 JMKIA0062GB
					When Intelligent Key is not in the passenger compartment	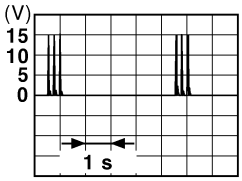 JMKIA0063GB
35 (W)	Ground	Trunk room antenna (+)	Output	Ignition switch OFF	When Intelligent Key is in the passenger compartment	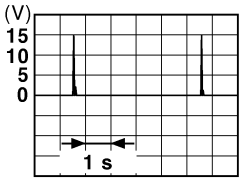 JMKIA0062GB
					When Intelligent Key is not in the passenger compartment	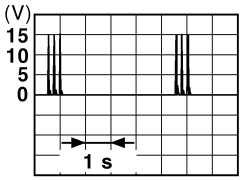 JMKIA0063GB
38 (L/O)	Ground	Rear bumper antenna (-)	Output	When the trunk lid opener request switch is operated with ignition switch OFF	When Intelligent Key is in the antenna detection area	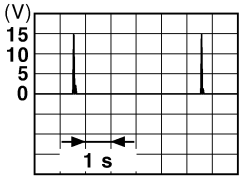 JMKIA0062GB
					When Intelligent Key is not in the antenna detection area	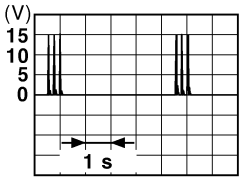 JMKIA0063GB

Terminal No. (Wire color) +	Terminal No. (Wire color) –	Description: Signal name	Description: Input/Output	Condition		Value (Approx.)
39 (BR/W)	Ground	Rear bumper antenna (+)	Output	When the trunk lid opener request switch is operated with ignition switch OFF	When Intelligent Key is in the antenna detection area	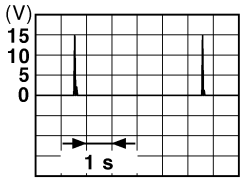 JMKIA0062GB
					When Intelligent Key is not in the antenna detection area	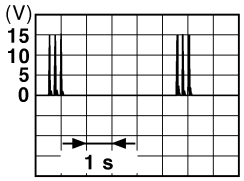 JMKIA0063GB
47 (BR/W)	Ground	Ignition relay (IPDM E/R) control	Output	Ignition switch	OFF or ACC	Battery voltage
					ON	0 V
50 (W)	Ground	Trunk room lamp switch	Input	Trunk room lamp switch	OFF (When trunk lid closes)	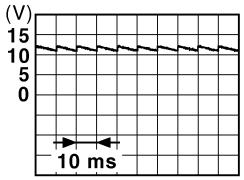 JPMIA0011GB 11.8 V
					ON (When trunk lid opens)	0 V
52 (R)	Ground	Starter relay control	Output	Ignition switch ON	When selector lever is in P or N position	Battery voltage
					When selector lever is not in P or N position	0.3 V
				Ignition switch OFF		0 V
61 (G/R)	Ground	Trunk lid request switch	Input	Trunk lid request switch	ON (Pressed)	0 V
					OFF (Not pressed)	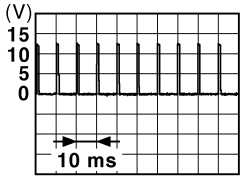 JPMIA0016GB 1.0 V
64 (GR)	Ground	Request switch buzzer	Output	Request switch buzzer	Sounding	0 V
					Not sounding	Battery voltage

Terminal No. (Wire color)		Description		Condition		Value (Approx.)
+	–	Signal name	Input/ Output			
67 (L/R)	Ground	Trunk lid opener switch	Input	Trunk lid opener switch	Pressed	0 V
					Not pressed	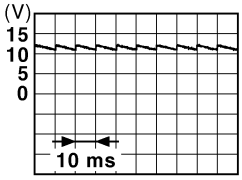 JPMIA0011GB 11.8 V
68 (R/W)	Ground	Rear RH door switch	Input	Rear RH door switch	OFF (When rear RH door closes)	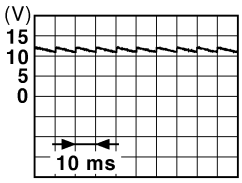 JPMIA0011GB 11.8 V
					ON (When rear RH door opens)	0 V
69 (R/B)	Ground	Rear LH door switch	Input	Rear LH door switch	OFF (When rear LH door closes)	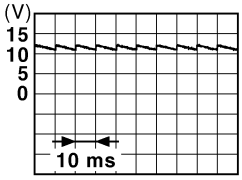 JPMIA0011GB 11.8 V
					ON (When rear LH door opens)	0 V
72 (B/R)	Ground	Room antenna 2 (-) (center console)	Output	Ignition switch OFF	When Intelligent Key is in the passenger compart-ment	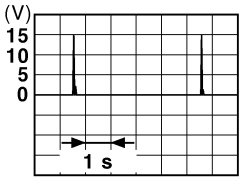 JMKIA0062GB
					When Intelligent Key is not in the passenger compartment	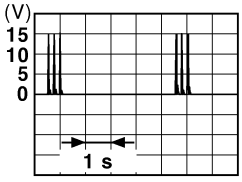 JMKIA0063GB

Terminal No. (Wire color)		Description		Condition		Value (Approx.)
+	–	Signal name	Input/ Output			
73 (W/R)	Ground	Room antenna 2 (+) (center console)	Output	Ignition switch OFF	When Intelligent Key is in the passenger compartment	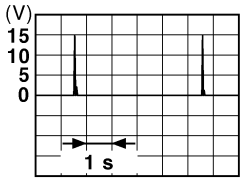 JMKIA0062GB
					When Intelligent Key is not in the passenger compartment	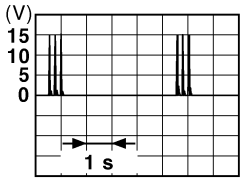 JMKIA0063GB
74 (B/Y)	Ground	Passenger door antenna (-)	Output	When the passenger door request switch is operated with ignition switch OFF	When Intelligent Key is in the antenna detection area	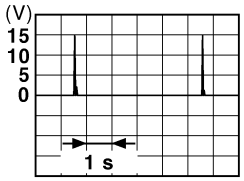 JMKIA0062GB
					When Intelligent Key is not in the antenna detection area	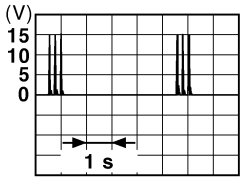 JMKIA0063GB
75 (LG)	Ground	Passenger door antenna (+)	Output	When the passenger door request switch is operated with ignition switch OFF	When Intelligent Key is in the antenna detection area	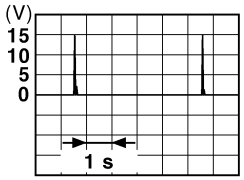 JMKIA0062GB
					When Intelligent Key is not in the antenna detection area	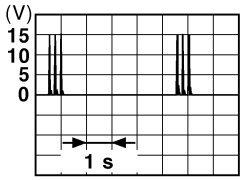 JMKIA0063GB

Terminal No. (Wire color)		Description		Condition		Value (Approx.)
+	–	Signal name	Input/ Output			
76 (V)	Ground	Driver door antenna (-)	Output	When the driver door request switch is operated with ignition switch OFF	When Intelligent Key is in the antenna detection area	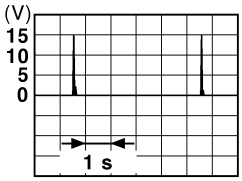 JMKIA0062GB
					When Intelligent Key is not in the antenna detection area	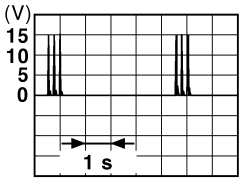 JMKIA0063GB
77 (P)	Ground	Driver door antenna (+)	Output	When the driver door request switch is operated with ignition switch OFF	When Intelligent Key is in the antenna detection area	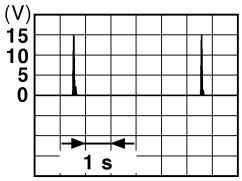 JMKIA0062GB
					When Intelligent Key is not in the antenna detection area	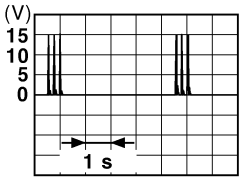 JMKIA0063GB
78 (R)	Ground	Room antenna 1 (-) (instrument panel)	Output	Ignition switch OFF	When Intelligent Key is in the passenger compartment	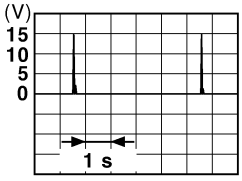 JMKIA0062GB
					When Intelligent Key is not in the passenger compartment	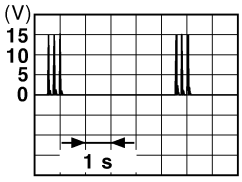 JMKIA0063GB

Terminal No. (Wire color)		Description		Condition		Value (Approx.)
+	–	Signal name	Input/ Output			
79 (G)	Ground	Room antenna 1 (+) (instrument panel)	Output	Ignition switch OFF	When Intelligent Key is in the passenger compartment	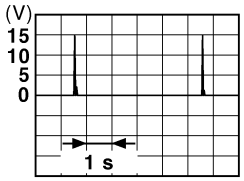 JMKIA0062GB
					When Intelligent Key is not in the passenger compartment	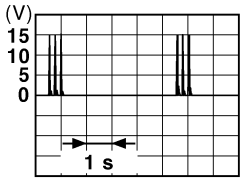 JMKIA0063GB
80 (G/O)	Ground	NATS antenna amp (built in key slot)	Input/ Output	During waiting	Ignition switch is pressed while inserting the key into the key slot.	Just after pressing ignition switch. Pointer of tester should move.
81 (O)	Ground	NATS antenna amp (built in key slot)	Input/ Output	During waiting	Ignition switch is pressed while inserting the key into the key slot.	Just after pressing ignition switch. Pointer of tester should move.
82 (R/B)	Ground	Ignition relay [fuse block (J/B)] control	Output	Ignition switch	OFF or ACC	0 V
					ON	Battery voltage
83 (L/O)	Ground	Remote keyless entry receiver communication	Input/ Output	During waiting		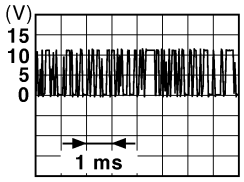 JMKIA0064GB
				When operating either button on the key		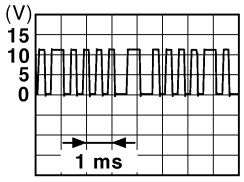 JMKIA0065GB

Terminal No. (Wire color)		Description		Condition		Value (Approx.)
+	–	Signal name	Input/ Output			
87 (R/Y)	Ground	Combination switch INPUT 5	Input	Combination switch	All switch OFF (Wiper intermittent dial 4)	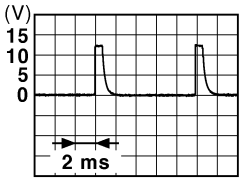 JPMIA0041GB 1.4 V
					Front fog lamp switch ON (Wiper intermittent dial 4)	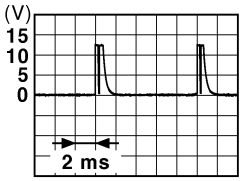 JPMIA0037GB 1.3 V
					Rear fog lamp switch ON (Wiper intermittent dial 4)	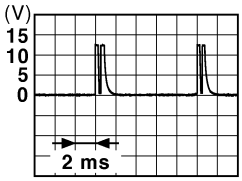 JPMIA0142GB 1.2 V
					Any of the conditions below with all switch OFF • Wiper intermittent dial 1 • Wiper intermittent dial 2 • Wiper intermittent dial 6 • Wiper intermittent dial 7	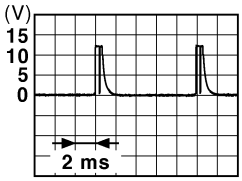 JPMIA0040GB 1.3 V

Terminal No. (Wire color)		Description		Condition		Value (Approx.)
+	–	Signal name	Input/ Output			
88 (R/G)	Ground	Combination switch INPUT 3	Input	Combination switch	All switch OFF (Wiper intermittent dial 4)	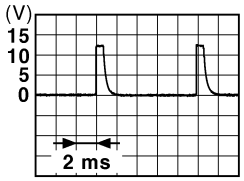 JPMIA0041GB 1.4 V
					Lighting switch HI (Wiper intermittent dial 4)	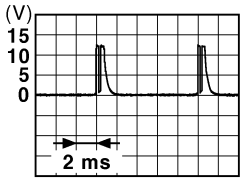 JPMIA0036GB 1.3 V
					Lighting switch 2ND (Wiper intermittent dial 4)	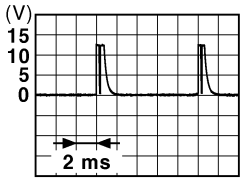 JPMIA0037GB 1.3 V
					Any of the conditions below with all switch OFF • Wiper intermittent dial 1 • Wiper intermittent dial 2 • Wiper intermittent dial 3	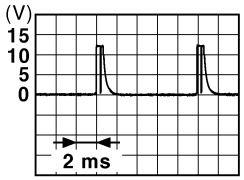 JPMIA0040GB 1.3 V
89 (BR)	Ground	Push-button ignition switch (push switch)	Input	Push-button ignition switch (push switch)	Pressed	0 V
					Not pressed	Battery voltage
90 (P)	Ground	CAN-L	Input/ Output	—		—
91 (L)	Ground	CAN-H	Input/ Output	—		—
92 (R/L)	Ground	Key slot illumination	Output	Key slot illumination	OFF	Battery voltage
					Blinking	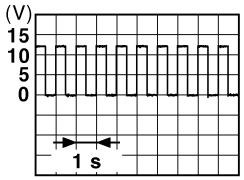 JPMIA0015GB 6.5 V
					ON	0 V

Terminal No. (Wire color)		Description		Condition		Value (Approx.)
+	–	Signal name	Input/ Output			
93 (Y)	Ground	ON indicator lamp	Output	Ignition switch	OFF (LOCK indicator is not illuminated)	Battery voltage
					ON or ACC	0 V
95 (L)	Ground	ACC relay control	Output	Ignition switch	OFF	0 V
					ACC or ON	Battery voltage
96 (Y/R)	Ground	Control device (detention switch) power supply	Output	—		Battery voltage
97 (L/O)	Ground	Steering lock condition No. 1	Input	Steering lock	LOCK status	0 V
					UNLOCK status	Battery voltage
98 (G/R)	Ground	Steering lock condition No. 2	Input	Steering lock	LOCK status	Battery voltage
					UNLOCK status	0 V
99 (G/B)	Ground	Selector lever P position switch	Input	Selector lever	P position	0 V
					Any position other than P	Battery voltage
100 (P/L)	Ground	Passenger door request switch	Input	Passenger door request switch	ON (Pressed)	0 V
					OFF (Not pressed)	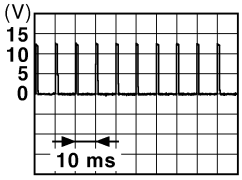 JPMIA0016GB 1.0 V
101 (B/W)	Ground	Driver door request switch	Input	Driver door request switch	ON (Pressed)	0 V
					OFF (Not pressed)	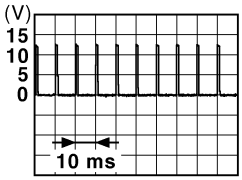 JPMIA0016GB 1.0 V
102 (Y)	Ground	Blower fan motor relay control	Output	Ignition switch	OFF or ACC	0 V
					ON	Battery voltage
103 (L/R)	Ground	Remote keyless entry receiver power supply	Output	Ignition switch OFF		Battery voltage
106 (G/Y)	Ground	Steering wheel lock unit power supply	Output	Ignition switch	OFF or ACC	Battery voltage
					ON	0 V

Terminal No. (Wire color)		Description		Condition		Value (Approx.)
+	–	Signal name	Input/ Output			
107 (R/W)	Ground	Combination switch INPUT 1	Input	Combination switch (Wiper intermittent dial 4)	All switch OFF	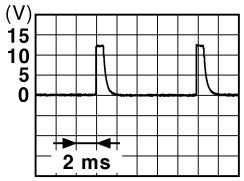 JPMIA0041GB 1.4 V
					Turn signal switch LH	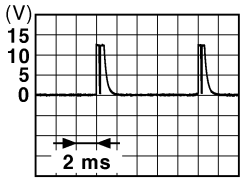 JPMIA0037GB 1.3 V
					Turn signal switch RH	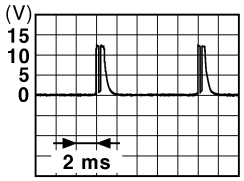 JPMIA0036GB 1.3 V
					Front wiper switch LO	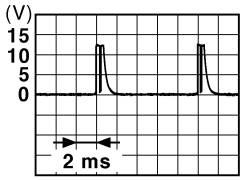 JPMIA0038GB 1.3 V
					Front washer switch ON	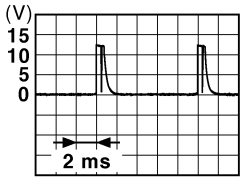 JPMIA0039GB 1.3 V

Terminal No. (Wire color)		Description		Condition		Value (Approx.)
+	–	Signal name	Input/ Output			
108 (P/B)	Ground	Combination switch INPUT 4	Input	Combination switch	All switch OFF (Wiper intermittent dial 4)	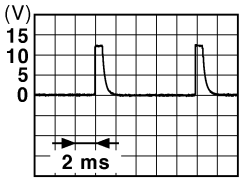 JPMIA0041GB 1.4 V
					Lighting switch AUTO (Wiper intermittent dial 4)	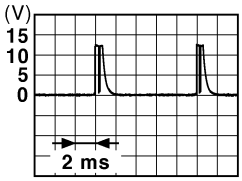 JPMIA0038GB 1.3 V
					Lighting switch 1ST (Wiper intermittent dial 4)	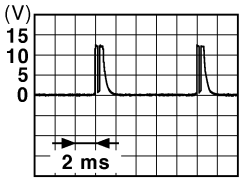 JPMIA0036GB 1.3 V
					Any of the conditions below with all switch OFF • Wiper intermittent dial 1 • Wiper intermittent dial 5 • Wiper intermittent dial 6	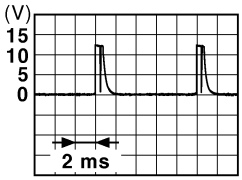 JPMIA0039GB 1.3 V

Terminal No. (Wire color)		Description		Condition		Value (Approx.)
+	–	Signal name	Input/ Output			
109 (R/B)	Ground	Combination switch INPUT 2	Input	Combination switch (Wiper intermittent dial 4)	All switch OFF	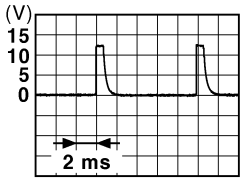 JPMIA0041GB 1.4 V
					Lighting switch PASS	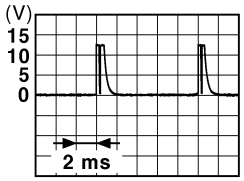 JPMIA0037GB 1.3 V
					Lighting switch 2ND	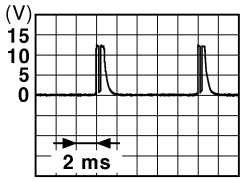 JPMIA0036GB 1.3 V
					Front wiper switch INT	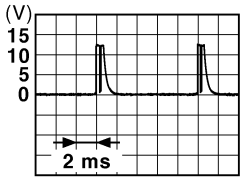 JPMIA0038GB 1.3 V
					Front wiper switch HI	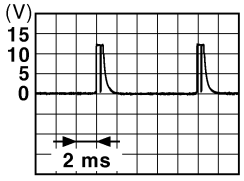 JPMIA0040GB 1.3 V
110 (G/O)	Ground	Hazard switch	Input	Hazard switch	ON	0 V
					OFF	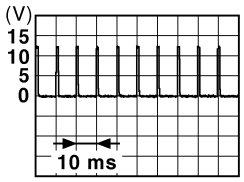 JPMIA0012GB 1.1 V

Terminal No. (Wire color)		Description		Condition		Value (Approx.)
+	–	Signal name	Input/ Output			
111 (L/Y)	Ground	Steering lock unit communication	Input/ Output	Steering lock	LOCK status	Battery voltage
					LOCK or UNLOCK	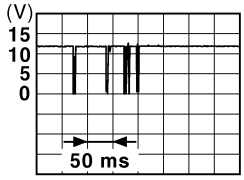 JMKIA0066GB
					For 15 seconds after UN-LOCK	Battery voltage
					15 seconds or later after UNLOCK	0 V
113 (P/B)	Ground	Optical sensor	Input	Ignition switch ON	When bright outside of the vehicle	Close to 5 V
					When dark outside of the vehicle	Close to 0 V
115 (L)	Ground	Shock sensor	Input	Ignition switch	OFF	0 V
					ACC	5.0 V
					ON	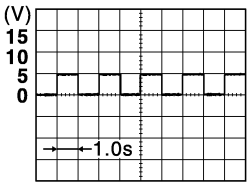 JPMIA1034GB 2.5 V
116 (R/W)	Ground	Fuse check (Stop lamp switch)	Input	—		Battery voltage
118 (O/L)	Ground	Stop lamp switch	Input	Stop lamp switch	OFF (Brake pedal is not depressed)	0 V
					ON (Brake pedal is de-pressed)	Battery voltage
119 (G/W)	Ground	Front door lock as-sembly driver side (unlock sensor)	Input	Driver door	LOCK status (unlock sen-sor switch OFF)	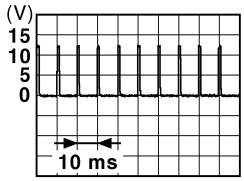 JPMIA0012GB 1.1 V
					UNLOCK status (unlock sensor switch ON)	0 V
121 (Y)	Ground	Key slot switch	Input	When the key is inserted into key slot		Battery voltage
				When the key is not inserted into key slot		0 V
122 (V/R)	Ground	ACC feedback	Input	Ignition switch	OFF	0 V
					ACC or ON	Battery voltage
123 (G/W)	Ground	IGN feedback	Input	Ignition switch	OFF or ACC	0 V
					ON	Battery voltage

Terminal No. (Wire color) +	Terminal No. (Wire color) –	Description: Signal name	Description: Input/Output	Condition		Value (Approx.)
124 (R/B)	Ground	Passenger door switch	Input	Passenger door switch	OFF (When passenger door closes)	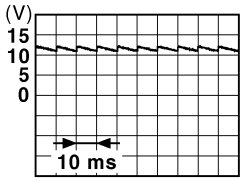 JPMIA0011GB 11.8 V
					ON (When passenger door opens)	0 V
128 (GR)	Ground	Door lock and unlock switch LOCK	Input	Door lock and unlock switch [power window main switch or front power window switch (passenger side)]	NEUTRAL position	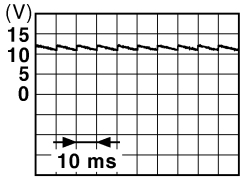 JPMIA0011GB 11.8 V
					LOCK position	0 V
130* (GR/W)	Ground	Rear window defogger switch	Input	Ignition switch ON	Rear window defogger switch OFF	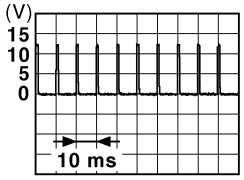 JPMIA0012GB 1.1 V
					Rear window defogger switch ON	0 V
131 (GR/R)	Ground	Door lock and unlock switch UNLOCK	Input	Door lock and unlock switch [power window main switch or front power window switch (passenger side)]	NEUTRAL position	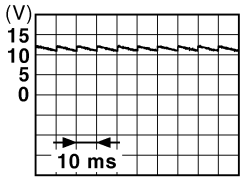 JPMIA0011GB 11.8 V
					UNLOCK position	0 V
133 (W)	Ground	Push-button ignition switch illumination	Output	Push-button ignition switch illumination	ON	9.5 V
					OFF	0 V
134 (R)	Ground	LOCK indicator lamp	Output	LOCK indicator lamp	OFF	Battery voltage
					ON	0 V
137 (P)	Ground	Receiver and sensor ground	Input	Ignition switch ON		0 V
138 (V/W)	Ground	Receiver and sensor power supply output	Output	Ignition switch	OFF	0 V
					ACC or ON	5.0 V
140 (R/G)	Ground	Selector lever P/N position	Input	Selector lever	P or N position	Battery voltage
					Except P and N positions	0 V

Terminal No. (Wire color)		Description		Condition		Value (Approx.)
+	–	Signal name	Input/ Output			
141 (L/O)	Ground	Security indicator	Output	Security indicator	ON	0 V
					Blinking	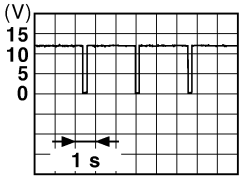 JPMIA0014GB 11.3 V
					OFF	Battery voltage
142 (LG/B)	Ground	Combination switch OUTPUT 5	Output	Combination switch (Wiper intermittent dial 4)	All switch OFF	0 V
					Lighting switch 1ST	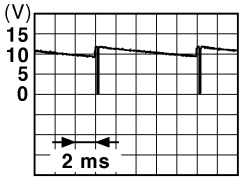 JPMIA0031GB 10.7 V
					Lighting switch HI	
					Lighting switch 2ND	
					Turn signal switch RH	
143 (L/W)	Ground	Combination switch OUTPUT 1	Output	Combination switch	All switch OFF (Wiper intermittent dial 4)	0 V
					Front wiper switch HI (Wiper intermittent dial 4)	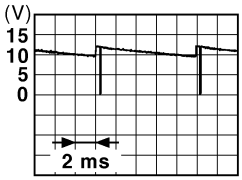 JPMIA0032GB 10.7 V
					Any of the conditions below with all switch OFF • Wiper intermittent dial 1 • Wiper intermittent dial 2 • Wiper intermittent dial 3 • Wiper intermittent dial 6 • Wiper intermittent dial 7	
144 (G/B)	Ground	Combination switch OUTPUT 2	Output	Combination switch	All switch OFF (Wiper intermittent dial 4)	0 V
					Front washer switch ON (Wiper intermittent dial 4)	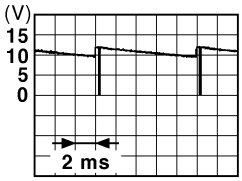 JPMIA0033GB 10.7 V
					Any of the conditions below with all switch OFF • Wiper intermittent dial 1 • Wiper intermittent dial 5 • Wiper intermittent dial 6	

Terminal No. (Wire color)		Description		Condition		Value (Approx.)
+	–	Signal name	Input/ Output			
145 (LG/R)	Ground	Combination switch OUTPUT 3	Output	Combination switch (Wiper intermittent dial 4)	All switch OFF	0 V
					Front wiper switch INT	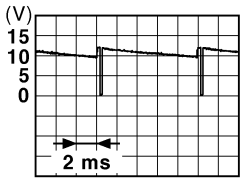 JPMIA0034GB 10.7 V
					Front wiper switch LO	
					Lighting switch AUTO	
					Rear fog lamp switch ON	
146 (G/Y)	Ground	Combination switch OUTPUT 4	Output	Combination switch (Wiper intermittent dial 4)	All switch OFF	0 V
					Front fog lamp switch ON	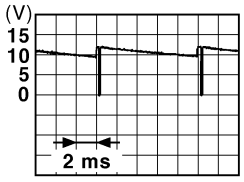 JPMIA0035GB 10.7 V
					Lighting switch 2ND	
					Lighting switch PASS	
					Turn signal switch LH	
150 (SB)	Ground	Driver door switch	Input	Driver door switch	OFF (When driver door closes)	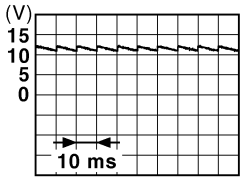 JPMIA0011GB 11.8 V
					ON (When driver door opens)	0 V
151 (G/R)	Ground	Rear window defogger relay	Output	Rear window defogger	Active	0 V
					Not activated	Battery voltage

NOTE:

*: Without BOSE audio system

Wiring Diagram - BCM -

INFOID:0000000003904113

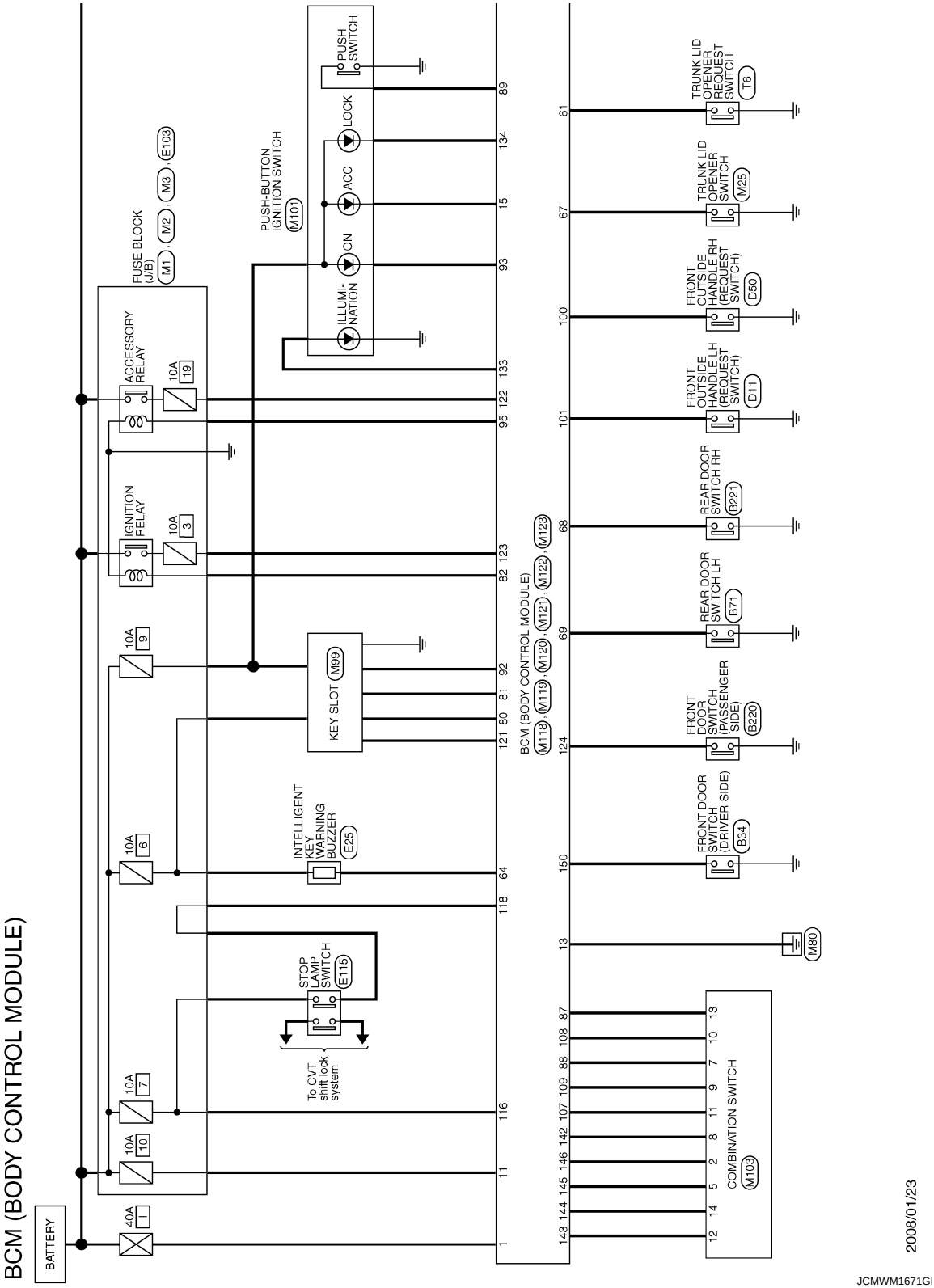

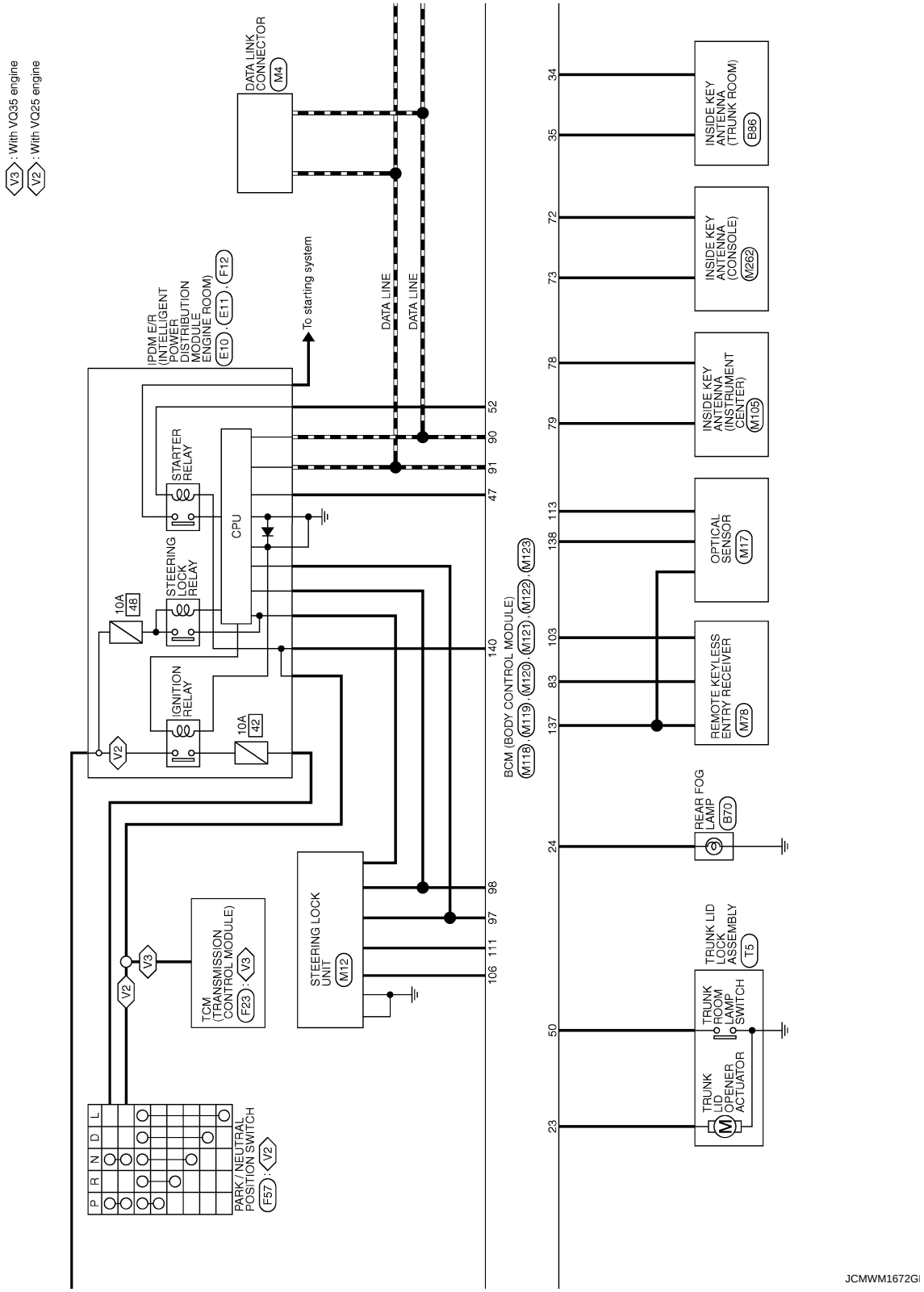
V3 : With VQ35 engine
V2 : With VQ25 engine
DATA LINK CONNECTOR
M4
IPDM E/R (INTELLIGENT POWER DISTRIBUTION MODULE ENGINE ROOM)
E10, E11, F12
To starting system
DATA LINE
DATA LINE
STARTER RELAY
CPU
STEERING LOCK RELAY
10A
46
IGNITION RELAY
10A
42
V2
V3
V2
TCM (TRANSMISSION CONTROL MODULE)
F23, V3
STEERING LOCK UNIT
M12
P R N D L
PARK / NEUTRAL POSITION SWITCH
F57, V2
52
90
91
47
140
98
97
111
106
BCM (BODY CONTROL MODULE)
M118, M119, M120, M121, M122, M123
34
35
72
73
78
79
113
138
103
83
137
24
50
23
INSIDE KEY ANTENNA (TRUNK ROOM)
B86
INSIDE KEY ANTENNA (CONSOLE)
M262
INSIDE KEY ANTENNA (INSTRUMENT CENTER)
M105
OPTICAL SENSOR
M17
REMOTE KEYLESS ENTRY RECEIVER
M78
REAR FOG LAMP
B70
TRUNK LID LOCK ASSEMBLY
T5
TRUNK ROOM LAMP SWITCH
TRUNK LID OPENER ACTUATOR
JCMWM1672GI

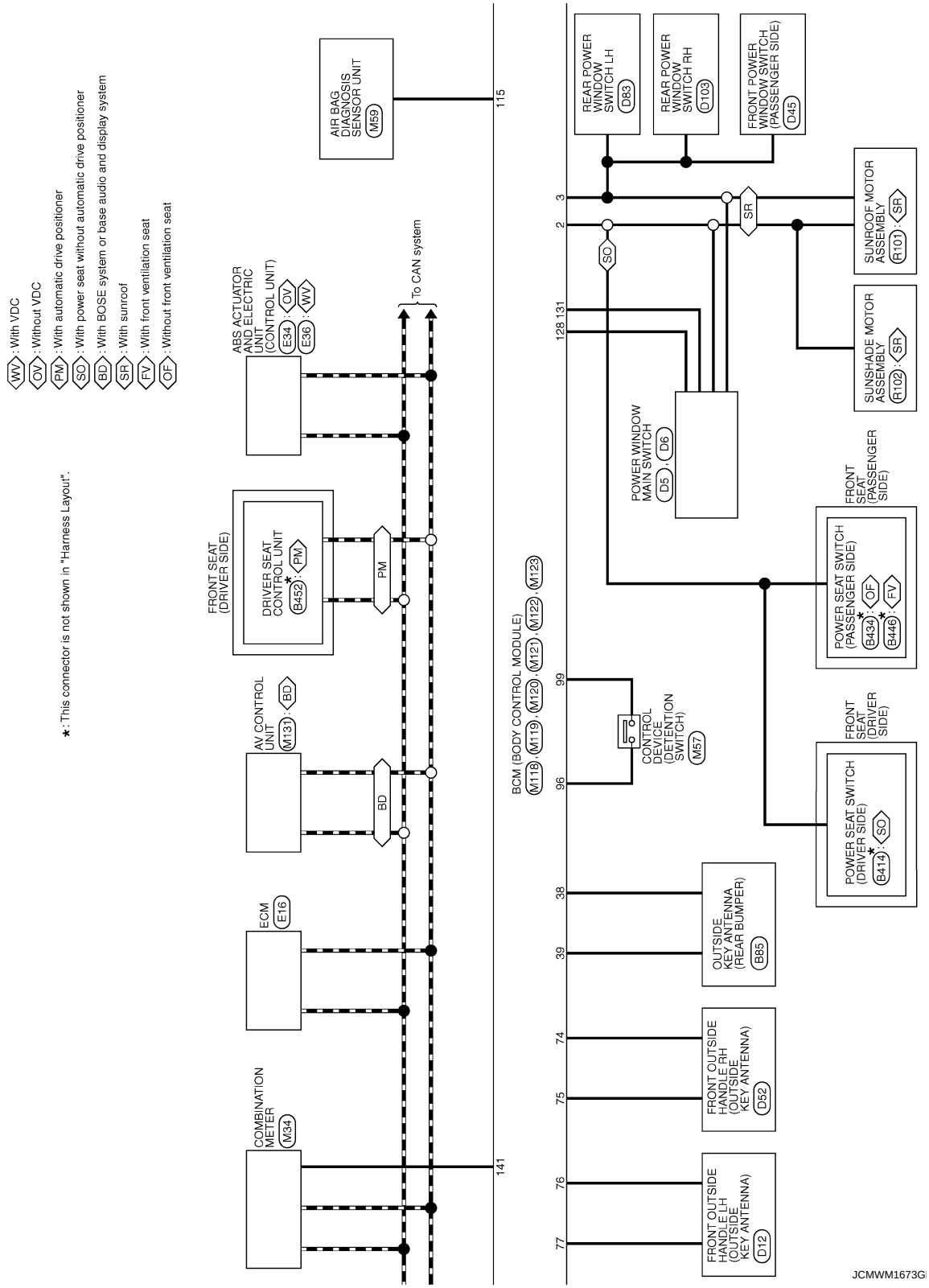
WV : With VDC
OV : Without VDC
PM : With automatic drive positioner
SO : With power seat without automatic drive positioner
BD : With BOSE system or base audio and display system
SR : With sunroof
FV : With front ventilation seat
OF : Without front ventilation seat
*: This connector is not shown in "Harness Layout".
AIR BAG DIAGNOSIS SENSOR UNIT M59
115
To CAN system
ABS ACTUATOR AND ELECTRIC UNIT (CONTROL UNIT) E34 OV E36 WV
FRONT SEAT (DRIVER SIDE)
DRIVER SEAT CONTROL UNIT * B452 PM
PM
AV CONTROL UNIT M131 BD
BD
ECM E16
COMBINATION METER M34
141
REAR POWER WINDOW SWITCH LH D83
REAR POWER WINDOW SWITCH RH D103
FRONT POWER WINDOW SWITCH (PASSENGER SIDE) D45
3
2
SR
SO
SUNROOF MOTOR ASSEMBLY R101 SR
SUNSHADE MOTOR ASSEMBLY R102 SR
128 131
POWER WINDOW MAIN SWITCH D5 D6
FRONT SEAT (PASSENGER SIDE)
POWER SEAT SWITCH (PASSENGER SIDE) * B434 OF * B446 FV
FRONT SEAT (DRIVER SIDE)
POWER SEAT SWITCH (DRIVER SIDE) * B413 SO
99
96
BCM (BODY CONTROL MODULE) M118 M119 M120 M121 M122 M123
CONTROL DEVICE (DETENTION SWITCH) M57
38
39
OUTSIDE KEY ANTENNA (REAR BUMPER) B85
74
75
FRONT OUTSIDE HANDLE RH (OUTSIDE KEY ANTENNA) D52
76
77
FRONT OUTSIDE HANDLE LH (OUTSIDE KEY ANTENNA) D12
JCMWM1673G

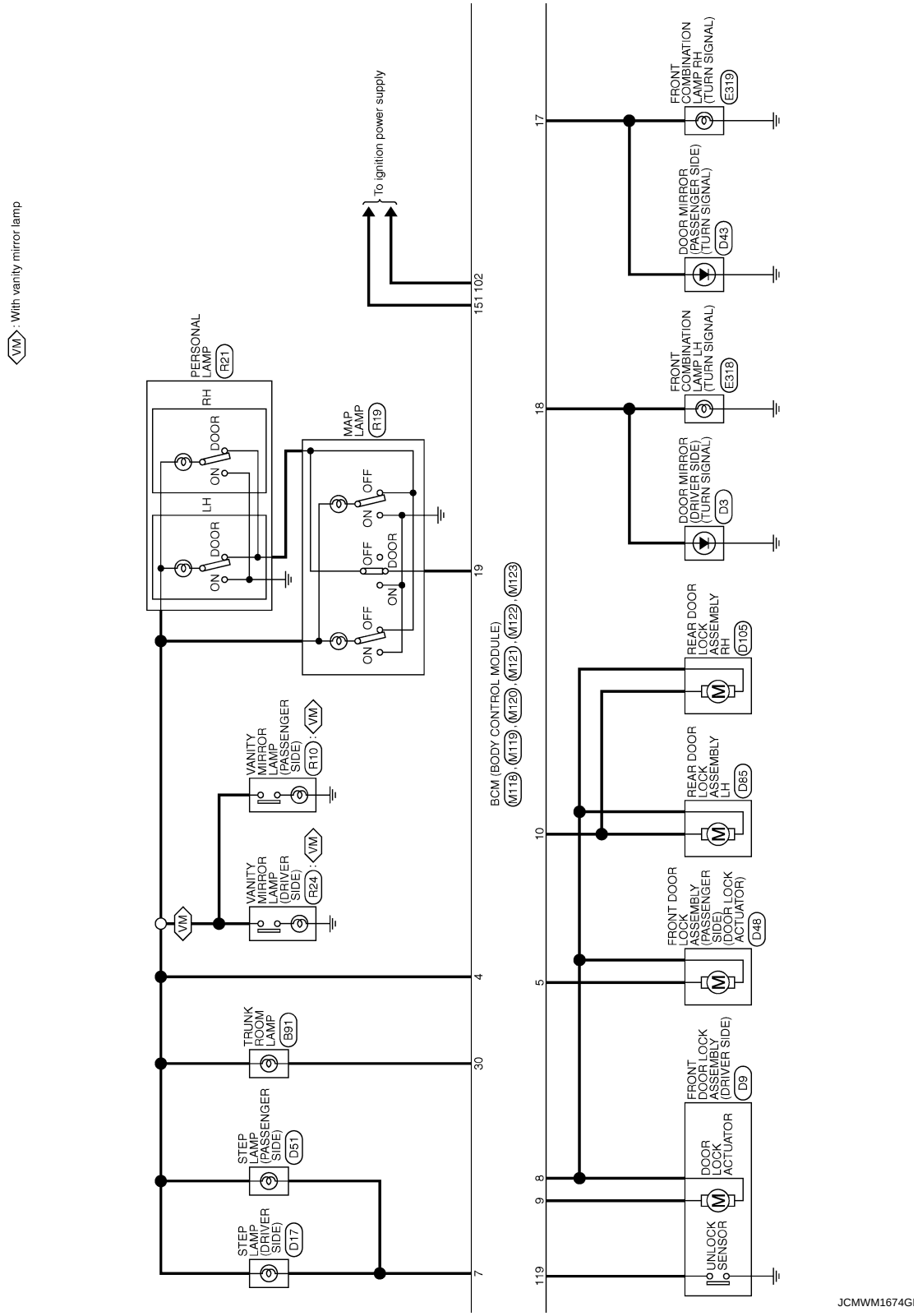
VM : With vanity mirror lamp
To ignition power supply
151 102
PERSONAL LAMP R21
RH
LH
DOOR
ON
MAP LAMP R19
OFF
ON
DOOR
19
VANITY MIRROR LAMP (PASSENGER SIDE) R10
VANITY MIRROR LAMP (DRIVER SIDE) R24
VM
4
TRUNK ROOM LAMP B91
30
STEP LAMP (PASSENGER SIDE) D51
STEP LAMP (DRIVER SIDE) D17
7
BCM (BODY CONTROL MODULE)
M118, M119, M120, M121, M122, M123
17
18
10
5
8
9
119
FRONT COMBINATION LAMP RH (TURN SIGNAL) E319
DOOR MIRROR (PASSENGER SIDE) (TURN SIGNAL) D43
FRONT COMBINATION LAMP LH (TURN SIGNAL) E318
DOOR MIRROR (DRIVER SIDE) (TURN SIGNAL) D3
REAR DOOR LOCK ASSEMBLY RH D105
REAR DOOR LOCK ASSEMBLY LH D85
FRONT DOOR LOCK ASSEMBLY (PASSENGER SIDE) (DOOR LOCK ACTUATOR) D48
FRONT DOOR LOCK ASSEMBLY (DRIVER SIDE) D9
DOOR LOCK ACTUATOR
UNLOCK SENSOR
JCMWM1674GI

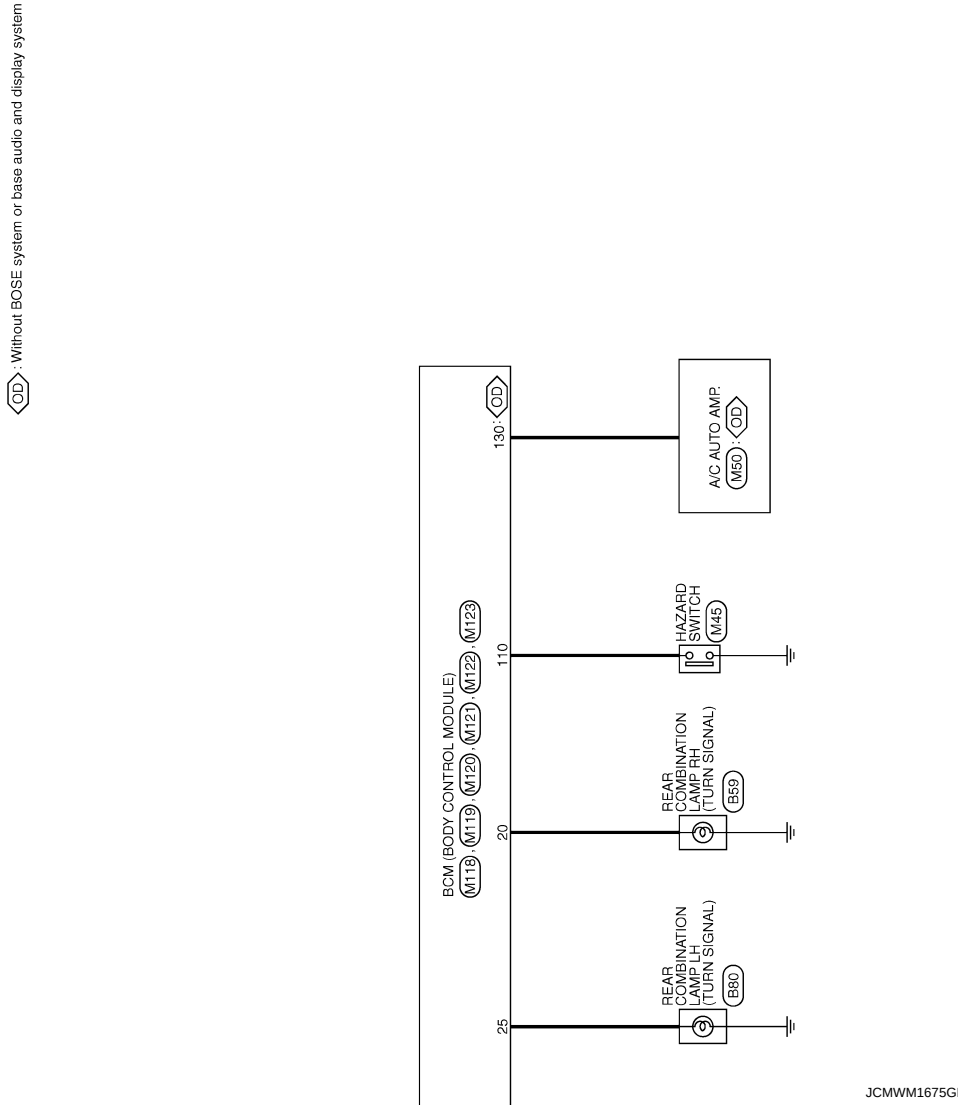
OD : Without BOSE system or base audio and display system
BCM (BODY CONTROL MODULE)
M118, M119, M120, M121, M122, M123
25
20
110
130 : OD
REAR COMBINATION LAMP LH (TURN SIGNAL)
B80
REAR COMBINATION LAMP RH (TURN SIGNAL)
B59
HAZARD SWITCH
M45
A/C AUTO AMP.
M50 : OD
JCMWM1675G

BCM (BODY CONTROL MODULE)

Connector No.	M103
Connector Name	COMBINATION SWITCH
Connector Type	TH16FW-NH

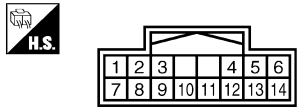

Terminal No.	Color of Wire	Signal Name [Specification]
2	G/Y	OUTPUT 4
5	LG/R	OUTPUT 3
7	R/G	INPUT 3
8	LG/B	OUTPUT 5
9	R/B	INPUT 2
10	P/B	INPUT 4
11	R/W	INPUT 1
12	L/W	OUTPUT 1
13	R/Y	INPUT 5
14	G/B	OUTPUT 2

Connector No.	M118
Connector Name	BCM (BODY CONTROL MODULE)
Connector Type	M03FB-LC

Terminal No.	Color of Wire	Signal Name [Specification]
1	W/B	BAT (F/L)
2	R/Y	POWER WINDOW POWER SUPPLY (BAT)
3	L/W	POWER WINDOW POWER SUPPLY (IGN)

Connector No.	M119
Connector Name	BCM (BODY CONTROL MODULE)
Connector Type	NS16FW-CS

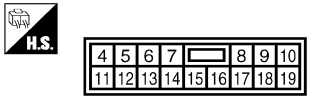

Terminal No.	Color of Wire	Signal Name [Specification]
4	P/W	INTERIOR ROOM LAMP POWER SUPPLY
5	G/Y	PASSENGER DOOR UNLOCK OUTPUT
7	R/W	STEP LAMP OUTPUT
8	V	ALL DOOR LOCK OUTPUT
9	G	DRIVER DOOR UNLOCK OUTPUT
10	G/Y	REAR DOOR UNLOCK OUTPUT
11	Y/R	BAT (FUSE)
13	B	GND
15	Y	ACC IND
17	G/B	TURN SIGNAL RH (FRONT, D/MIRROR)
18	G/Y	TURN SIGNAL LH (FRONT, D/MIRROR)
19	Y	ROOM LAMP TIMER CONTROL
69	R/B	REAR LH DOOR SW

Connector No.	M120
Connector Name	BCM (BODY CONTROL MODULE)
Connector Type	NS12FW-CS

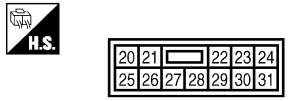

Terminal No.	Color of Wire	Signal Name [Specification]
20	G/B	TURN SIGNAL RH (REAR)
23	R	TRUNK OPEN OUTPUT
24	G	REAR FOG LAMP OUTPUT
25	G/Y	TURN SIGNAL LH (REAR)
30	V/W	TRUNK LAMP OUTPUT

Connector No.	M121
Connector Name	BCM (BODY CONTROL MODULE)
Connector Type	TH40FGY-NH

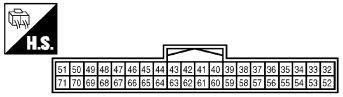

Terminal No.	Color of Wire	Signal Name [Specification]
34	B	TRUNK ANT 1 B
35	W	TRUNK ANT 1 A
38	L/O	RR BUMPER ANT B
39	BR/W	RR BUMPER ANT A
47	BR/W	IGN RELAY IPDM E/R CONT
50	W	TRUNK SW
52	R	IGN RELAY IPDM E/R CONT
61	G/R	TRUNK REQUEST SW
64	GR	REQUEST SW BUZZER
67	L/R	INTERIOR TRUNK SW
68	R/W	REAR RH DOOR SW

JCMWM1676GI

BCM (BODY CONTROL MODULE)

Connector No.	M122
Connector Name	BCM (BODY CONTROL MODULE)
Connector Type	TH40FB-NH

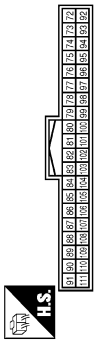

Terminal No.	Color of Wire	Signal Name [Specification]
72	B/R	ROOM ANT2–
73	W/R	ROOM ANT2+
74	B/Y	PASSENGER DOOR ANT–
75	LG	PASSENGER DOOR ANT+
76	V	DRIVER DOOR ANT–
77	P	DRIVER DOOR ANT+
78	R	ROOM ANT1–
79	G	ROOM ANT1+
80	G/O	FOB READER CLOCK
81	O	FOB READER DATA
82	R/B	IGN RELAY (F/B) CONT

83	L/O	KEYLESS ENTRY RECEIVER SIGNAL
87	R/Y	COMBI SW INPUT 5
88	R/G	COMBI SW INPUT 3
89	BR	PUSH SW
90	P	CAN–L
91	L	CAN–H
92	R/L	FOB SLOT ILLUMINATION
93	Y	ON IND
95	L	ACC RELAY CONT
96	Y/R	CONTROL DEVICE POWER SUPPLY
97	L/O	S/L CONDITION 1
98	G/R	S/L CONDITION 2
99	G/B	SHIFT P
100	P/L	PASSENGER DOOR REQUEST SW
101	B/W	DRIVER DOOR REQUEST SW
102	Y	BLOWER FAN MOTOR RELAY CONT
103	L/R	KEYLESS ENTRY RECEIVER POWER SUPPLY
106	G/Y	S/L POWER SUPPLY
107	R/W	COMBI SW INPUT 1
108	P/B	COMBI SW INPUT 4
109	R/B	COMBI SW INPUT 2
110	G/O	HAZARD SW
111	L/Y	S/L COMM

Connector No.	M123
Connector Name	BCM (BODY CONTROL MODULE)
Connector Type	TH40FG-NH

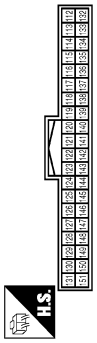

Terminal No.	Color of Wire	Signal Name [Specification]
113	P/B	OPTICAL SENSOR
115	L	SHOCK SENSOR SIGNAL
116	R/W	STOP L LOW SW
118	O/L	STOP L HIGH SW
119	G/W	DR DOOR UNLOCK SENSOR
121	Y	KEY SLOT SW
122	V/R	ACC F/B
123	G/W	IGN F/B
124	R/B	PASSENGER DOOR SW
128	GR	CENTRAL LOCK SW
130	GR/W	REAR DEFOGGER SW

131	GR/R	CENTRAL UNLOCK SW
133	W	PUSH–BUTTON IGNITION SW ILL POWER
134	R	LOCK LED
137	P	RECEIVER/SENSOR GND
138	V/W	RECEIVER/SENSOR POWER SUPPLY
140	R/G	SHIFT N/P
141	L/O	SECURITY INDICATOR OUTPUT
142	LG/B	COMBI SW OUTPUT 5
143	L/W	COMBI SW OUTPUT 1
144	G/B	COMBI SW OUTPUT 2
145	LG/R	COMBI SW OUTPUT 3
146	G/Y	COMBI SW OUTPUT 4
150	SB	DRIVER DOOR SW
151	G/R	REAR WINDOW DEFOGGER RELAY

JCMWM1677G

Fail-safe

INFOID:0000000003904114

FAIL-SAFE CONTROL BY DTC

BCM performs fail-safe control when any DTC is detected.

Display contents of CONSULT	Fail-safe	Cancellation
B2013: ID DISCORD BCM-S/L	Inhibit engine cranking	Erase DTC
B2014: CHAIN OF S/L-BCM	Inhibit engine cranking	Erase DTC
B2190: NATS ANTENNA AMP	Inhibit engine cranking	Erase DTC
B2191: DIFFERENCE OF KEY	Inhibit engine cranking	Erase DTC
B2192: ID DISCORD BCM-ECM	Inhibit engine cranking	Erase DTC
B2193: CHAIN OF BCM-ECM	Inhibit engine cranking	Erase DTC
B2557: VEHICLE SPEED	Inhibit steering lock	When normal vehicle speed signals have been received from ABS actuator and electric unit (control unit) for 500 ms
B2560: STARTER CONT RELAY	Inhibit engine cranking	500 ms after the following CAN signal communication status has become consistent • Starter control relay signal • Starter relay status signal
B2601: SHIFT POSITION	Inhibit steering lock	500 ms after the following signal reception status becomes consistent • Selector lever P position switch signal • P range signal (CAN)
B2602: SHIFT POSITION	Inhibit steering lock	5 seconds after the following BCM recognition conditions are fulfilled • Ignition switch is in the ON position • Selector lever P position switch signal: Except P position (battery voltage) • Vehicle speed: 4 km/h (2.5 MPH) or more
B2603: SHIFT POSI STATUS	Inhibit steering lock	500 ms after the following BCM recognition conditions are fulfilled • Ignition switch is in the ON position • Selector lever P position switch signal: Except P position (battery voltage) • Selector lever P/N position signal: Except P and N positions (0 V)
B2604: PNP SW	Inhibit steering lock	500 ms after any of the following BCM recognition conditions is fulfilled • Status 1 - Ignition switch is in the ON position - Selector lever P/N position signal: P and N position (battery voltage) - P range signal or N range signal (CAN): ON • Status 2 - Ignition switch is in the ON position - Selector lever P/N position signal: Except P and N positions (0 V) - P range signal and N range signal (CAN): OFF
B2605: PNP SW	Inhibit steering lock	500 ms after any of the following BCM recognition conditions is fulfilled • Ignition switch is in the ON position - Power position: IGN - Selector lever P/N position signal: Except P and N positions (0 V) - Interlock/PNP switch signal (CAN): OFF • Status 2 - Ignition switch is in the ON position - Selector lever P/N position signal: P or N position (battery voltage) - PNP switch signal (CAN): ON
B2606: S/L RELAY	Inhibit engine cranking	500 ms after the following CAN signal communication status has become consistent • Steering lock relay signal (Request signal) • Steering lock relay signal (Condition signal)
B2607: S/L RELAY	Inhibit engine cranking	500 ms after the following CAN signal communication status has become consistent • Steering lock relay signal (Request signal) • Steering lock relay signal (Condition signal)

Display contents of CONSULT	Fail-safe	Cancellation
B2608: STARTER RELAY	Inhibit engine cranking	500 ms after the following signal communication status becomes consistent • Starter motor relay control signal • Starter relay status signal (CAN)
B2609: S/L STATUS	• Inhibit engine cranking • Inhibit steering lock	When the following steering lock conditions agree • BCM steering lock control status • Steering lock condition No. 1 signal status • Steering lock condition No. 2 signal status
B260A: IGNITION RELAY	Inhibit engine cranking	500 ms after the following conditions are fulfilled • IGN relay (IPDM E/R) control signal: OFF (Battery voltage) • Ignition ON signal (CAN to IPDM E/R): OFF (Request signal) • Ignition ON signal (CAN from IPDM E/R): OFF (Condition signal)
B260F: ENG STATE SIG LOST	Maintains the power supply position attained at the time of DTC detection	When any of the following conditions is fulfilled • Power position changes to ACC • Receives engine status signal (CAN)
B2612: S/L STATUS	• Inhibit engine cranking • Inhibit steering lock	When any of the following conditions is fulfilled • Steering lock unit status signal (CAN) is received normally • The BCM steering lock control status matches the steering lock status recognized by the steering lock unit status signal (CAN from IPDM E/R)
B2617: STARTER RELAY CIRC	Inhibit engine cranking	1 second after the starter motor relay control inside BCM becomes normal
B2618: BCM	Inhibit engine cranking	1 second after the ignition relay (IPDM E/R) control inside BCM becomes normal
B2619: BCM	Inhibit engine cranking	1 second after the steering lock unit power supply output control inside BCM becomes normal
B261E: VEHICLE TYPE	Inhibit engine cranking	BCM initialization
B26E1: ENG STATE NO RES	Inhibit engine cranking	When any of the following conditions is fulfilled • Power position changes to ACC • Receives engine status signal (CAN)
B26E9: S/L STATUS	• Inhibit engine cranking • Inhibit steering lock	When BCM transmits the LOCK request signal to steering lock unit, and receives LOCK response signal from steering lock unit, the following conditions is fulfilled • Steering condition No. 1 signal: LOCK (0 V) • Steering condition No. 2 signal: LOCK (Battery voltage)

HIGH FLASHER OPERATION

BCM detects the turn signal lamp circuit status by the current value.
BCM increases the turn signal lamp blinking speed if the bulb or harness open is detected with the turn signal lamp operating.

NOTE:
The blinking speed is normal while activating the hazard warning lamp.

DTC Inspection Priority Chart

INFOID:0000000003904115

If some DTCs are displayed at the same time, perform inspections one by one based on the following priority chart.

Priority	DTC
1	B2562: LOW VOLTAGE
2	• U1000: CAN COMM CIRCUIT • U1010: CONTROL UNIT (CAN)
3	• B2190: NATS ANTENNA AMP • B2191: DIFFERENCE OF KEY • B2192: ID DISCORD BCM-ECM • B2193: CHAIN OF BCM-ECM

Priority	DTC
4	• B2013: ID DISCORD BCM-S/L • B2014: CHAIN OF S/L-BCM • B2553: IGNITION RELAY • B2555: STOP LAMP • B2556: PUSH-BTN IGN SW • B2557: VEHICLE SPEED • B2560: STARTER CONT RELAY • B2601: SHIFT POSITION • B2602: SHIFT POSITION • B2603: SHIFT POSI STATUS • B2604: PNP SW • B2605: PNP SW • B2606: S/L RELAY • B2607: S/L RELAY • B2608: STARTER RELAY • B2609: S/L STATUS • B260A: IGNITION RELAY • B260B: STEERING LOCK UNIT • B260C: STEERING LOCK UNIT • B260D: STEERING LOCK UNIT • B260F: ENG STATE SIG LOST • B2612: S/L STATUS • B2614: ACC RELAY CIRC • B2615: BLOWER RELAY CIRC • B2616: IGN RELAY CIRC • B2617: STARTER RELAY CIRC • B2618: BCM • B2619: BCM • B261A: PUSH-BTN IGN SW • B261E: VEHICLE TYPE • B26E1: ENG STATE NO RES • B26E9: S/L STATUS • B26EA: KEY REGISTRATION • U0415: VEHICLE SPEED SIG
5	• B2621: INSIDE ANTENNA • B2622: INSIDE ANTENNA • B2623: INSIDE ANTENNA

DTC Index

INFOID:0000000003904116

NOTE:
The details of time display are as follows.
- CRNT: A malfunction is detected now.
- PAST: A malfunction was detected in the past.

IGN counter is displayed on Freeze Frame Data. For details of Freeze Frame Data and IGN Counter, refer to BCS-16, "COMMON ITEM : CONSULT-III Function (BCM - COMMON ITEM)".

CONSULT display	Fail-safe	Freeze Frame Data	Intelligent Key warning lamp ON	Reference page
No DTC is detected. further testing may be required.	—	—	—	—
U1000: CAN COMM CIRCUIT	—	—	—	BCS-33
U1010: CONTROL UNIT (CAN)	—	—	—	BCS-34
U0415: VEHICLE SPEED SIG	—	—	—	BCS-35
B2013: ID DISCORD BCM-S/L	×	×	—	SEC-46
B2014: CHAIN OF S/L-BCM	×	×	—	SEC-47
B2190: NATS ANTENNA AMP	×	—	—	SEC-39
B2191: DIFFERENCE OF KEY	×	—	—	SEC-42

CONSULT display	Fail-safe	Freeze Frame Data	Intelligent Key warning lamp ON	Reference page
B2192: ID DISCORD BCM-ECM	×	—	—	SEC-43
B2193: CHAIN OF BCM-ECM	×	—	—	SEC-45
B2553: IGNITION RELAY	—	×	—	PCS-49
B2555: STOP LAMP	—	×	—	SEC-50
B2556: PUSH-BTN IGN SW	—	×	×	SEC-52
B2557: VEHICLE SPEED	×	×	×	SEC-54
B2560: STARTER CONT RELAY	×	×	×	SEC-55
B2562: LOW VOLTAGE	—	×	—	BCS-36
B2601: SHIFT POSITION	×	×	×	SEC-56
B2602: SHIFT POSITION	×	×	×	SEC-59
B2603: SHIFT POSI STATUS	×	×	×	SEC-61
B2604: PNP SW	×	×	×	SEC-64
B2605: PNP SW	×	×	×	SEC-67
B2606: S/L RELAY	×	×	×	SEC-69
B2607: S/L RELAY	×	×	×	SEC-70
B2608: STARTER RELAY	×	×	×	SEC-72
B2609: S/L STATUS	×	×	×	SEC-74
B260A: IGNITION RELAY	×	×	×	PCS-51
B260B: STEERING LOCK UNIT	—	×	×	SEC-78
B260C: STEERING LOCK UNIT	—	×	×	SEC-79
B260D: STEERING LOCK UNIT	—	×	×	SEC-80
B260F: ENG STATE SIG LOST	×	×	×	SEC-81
B2612: S/L STATUS	×	×	×	SEC-85
B2614: ACC RELAY CIRC	—	×	×	PCS-53
B2615: BLOWER RELAY CIRC	—	×	×	PCS-55
B2616: IGN RELAY CIRC	—	×	×	PCS-57
B2617: STARTER RELAY CIRC	×	×	×	SEC-89
B2618: BCM	×	×	×	PCS-59
B2619: BCM	×	×	×	SEC-91
B261A: PUSH-BTN IGN SW	—	×	×	SEC-92
B261E: VEHICLE TYPE	×	×	× (Turn ON for 15 seconds)	SEC-95
B2621: INSIDE ANTENNA	—	×	—	DLK-50
B2622: INSIDE ANTENNA	—	×	—	DLK-52
B2623: INSIDE ANTENNA	—	×	—	DLK-54
B26E1: ENG STATE NO RES	×	×	×	SEC-82
B26E9: S/L STATUS	×	×	× (Turn ON for 15 seconds)	SEC-83
B26EA: KEY REGISTRATION	—	×	× (Turn ON for 15 seconds)	SEC-84

SYMPTOM DIAGNOSIS

DOOR DOES NOT LOCK/UNLOCK WITH DOOR LOCK AND UNLOCK SWITCH

ALL DOOR

ALL DOOR : Diagnosis Procedure

INFOID:0000000003941945

1. CHECK POWER SUPPLY AND GROUND CIRCUIT

Check power supply and ground circuit.
Refer to DLK-56, "BCM (BODY CONTROL MODULE) : Diagnosis Procedure" (BCM).

Is the inspection result normal?

YES >> GO TO 2.
NO >> Repair or replace the malfunctioning parts.

2. CHECK DOOR LOCK AND UNLOCK SWITCH

Check door lock and unlock switch.
Refer to DLK-60, "Component Function Check".

Is the inspection result normal?

YES >> GO TO 3.
NO >> Repair or replace the malfunctioning parts.

3. CHECK DOOR LOCK ACTUATOR

Check door lock actuator .
Refer to DLK-61, "DRIVER SIDE : Component Function Check" (driver side), DLK-62, "PASSENGER SIDE : Component Function Check" (passenger side), Refer to DLK-63, "REAR LH : Component Function Check" (rear LH), DLK-63, "REAR RH : Component Function Check" (rear RH).

Is the inspection result normal?

YES >> GO TO 4.
NO >> Repair or replace the malfunctioning parts.

4. CONFIRM THE OPERATION

Confirm the operation again.

Is the result normal?

YES >> Check intermittent incident. Refer to GI-35, "Intermittent Incident".
NO >> GO TO 1.

DRIVER SIDE

DRIVER SIDE : Diagnosis Procedure

INFOID:0000000003941946

1. CHECK DOOR LOCK ACTUATOR

Check door lock actuator (driver side).
Refer to DLK-61, "DRIVER SIDE : Component Function Check".

Is the inspection result normal?

YES >> GO TO 2.
NO >> Repair or replace the malfunctioning parts.

2. CONFIRM THE OPERATION

Confirm the operation again.

Is the result normal?

YES >> Check intermittent incident. Refer to GI-35, "Intermittent Incident".
NO >> GO TO 1.

PASSENGER SIDE

PASSENGER SIDE : Diagnosis Procedure

INFOID:0000000003941947

1.CHECK DOOR LOCK ACTUATOR

Check door lock actuator (passenger side).
Refer to DLK-62, "PASSENGER SIDE : Component Function Check".

Is the inspection result normal?

YES >> GO TO 2.
NO >> Repair or replace the malfunctioning parts.

2.CONFIRM THE OPERATION

Confirm the operation again.

Is the result normal?

YES >> Check intermittent incident. Refer to GI-35, "Intermittent Incident".
NO >> GO TO 1.

REAR LH

REAR LH : Diagnosis Procedure

INFOID:0000000003941948

1.CHECK DOOR LOCK ACTUATOR

Check door lock actuator (rear LH).
Refer to DLK-63, "REAR LH : Component Function Check".

Is the inspection result normal?

YES >> GO TO 2.
NO >> Repair or replace the malfunctioning parts.

2.CONFIRM THE OPERATION

Confirm the operation again.

Is the result normal?

YES >> Check intermittent incident. Refer to GI-35, "Intermittent Incident".
NO >> GO TO 1.

REAR RH

REAR RH : Diagnosis Procedure

INFOID:0000000003941949

1.CHECK DOOR LOCK ACTUATOR

Check door lock actuator (rear RH).
Refer to DLK-63, "REAR RH : Component Function Check".

Is the inspection result normal?

YES >> GO TO 2.
NO >> Repair or replace the malfunctioning parts.

2.CONFIRM THE OPERATION

Confirm the operation again.

Is the result normal?

YES >> Check intermittent incident. Refer to GI-35, "Intermittent Incident".
NO >> GO TO 1.

VEHICLE SPEED SENSING AUTO LOCK OPERATION DOES NOT OPERATE

Diagnosis Procedure

INFOID:0000000003794988

1. CHECK POWER DOOR LOCK OPERATION

Check power door lock operation.

Does door lock/unlock with door lock and unlock switch?

YES >> GO TO 2.
NO >> Go to DLK-60, "Diagnosis Procedure".

2. CHECK VEHICLE SPEED SIGNAL

Check combination meter.
Refer to SEC-54, "DTC Logic".

Is the inspection result normal?

YES >> GO TO 3.
NO >> Repair or replace the malfunctioning parts.

3. CONFIRM THE OPERATION

Confirm the operation again.

Is the result normal?

YES >> Check intermittent incident. Refer to GI-35, "Intermittent Incident".
NO >> GO TO 1.

DOOR DOES NOT LOCK/UNLOCK WITH INTELLIGENT KEY

Description

INFOID:0000000003794992

NOTE:
- Before performing the diagnosis in the following procedure, check “Work Flow”. Refer to DLK-7, "Work Flow".
- Check that vehicle is under the condition shown in “Conditions of vehicle” before starting diagnosis, and check each symptom.

CONDITIONS OF VEHICLE (OPERATING CONDITIONS)
- Intelligent Key is removed from key slot.
- All doors are closed.

Diagnosis Procedure

INFOID:0000000003794993

1. CHECK POWER DOOR LOCK OPERATION

Check power door lock operation.

Does door lock/unlock with door lock and unlock switch?

YES >> GO TO 2.
NO >> Go to DLK-60, "Diagnosis Procedure".

2. CHECK REMOTE KEYLESS ENTRY RECEIVER

Check remote keyless entry receiver.
Refer to DLK-67, "Component Function Check".

Is the inspection result normal?

YES >> GO TO 3.
NO >> Repair or replace the malfunctioning parts.

3. CHECK INTELLIGENT KEY

Check Intelligent Key.
Refer to DLK-84, "Component Function Check".

Is the inspection result normal?

YES >> GO TO 4.
NO >> Repair or replace the malfunctioning parts.

4. CHECK KEY SLOT

Check key slot.
Refer to DLK-86, "Component Function Check".

Is the inspection result normal?

YES >> GO TO 5.
NO >> Repair or replace the malfunctioning parts.

5. CONFIRM THE OPERATION

Confirm the operation again.

Is the result normal?

YES >> Check intermittent incident. Refer to GI-35, "Intermittent Incident".
NO >> GO TO 1.

HAZARD AND HORN REMINDER DOES NOT OPERATE

Description

INFOID:0000000003795000

NOTE:
- Before performing the diagnosis following procedure, check “Work Flow”. Refer to DLK-7, "Work Flow".
- Check that vehicle is under the condition shown in “Conditions of vehicle” before starting diagnosis, and check each symptom.

CONDITIONS OF VEHICLE (OPERATION CONDITIONS)
- Ignition switch is in the OFF or LOCK position.
- Intelligent Key is removed from key slot.

Diagnosis Procedure

INFOID:0000000003795001

1. CHECK “HAZARD ANSWER BACK” SETTING IN “WORK SUPPORT”

Check “HAZARD ANSWER BACK” setting in “WORK SUPPORT”.
Refer to DLK-43, "INTELLIGENT KEY : CONSULT-III Function (BCM - INTELLIGENT KEY)".

Is the inspection result normal?

YES >> GO TO 2.
NO >> Set “HAZARD ANSWER BACK” setting in “WORK SUPPORT”.

2. CHECK “HORN WITH KEYLESS LOCK” SETTING IN “WORK SUPPORT”.

Check “HORN WITH KEYLESS LOCK” setting in “WORK SUPPORT”.
Refer to DLK-43, "INTELLIGENT KEY : CONSULT-III Function (BCM - INTELLIGENT KEY)".

Is the inspection result normal?

YES >> GO TO 3.
NO >> Set “HORN WITH KEYLESS LOCK” setting in “WORK SUPPORT”.

3. CHECK HAZARD WARNING LAMP

Check hazard warning lamp.
Refer to DLK-96, "Component Function Check".

Is the inspection result normal?

YES >> GO TO 4.
NO >> Repair or replace the malfunctioning parts.

4. CHECK HORN

Check horn.
Refer to DLK-91, "Component Function Check".

Is the inspection result normal?

YES >> GO TO 5.
NO >> Repair or replace the malfunctioning parts.

5. CONFIRM THE OPERATION

Confirm the operation again.

Is the result normal?

YES >> Check intermittent incident. Refer to GI-35, "Intermittent Incident".
NO >> GO TO 1.

AUTO DOOR LOCK OPERATION DOES NOT OPERATE

Description

INFOID:0000000003795002

NOTE:

- Before performing the diagnosis in the following procedure, check “Work Flow”. Refer to DLK-7, "Work Flow".

Diagnosis Procedure

INFOID:0000000003795003

1. CHECK “AUTO LOCK SET” SETTING IN “WORK SUPPORT”

Check “AUTO LOCK SET” setting in “WORK SUPPORT”.
Refer to DLK-43, "INTELLIGENT KEY : CONSULT-III Function (BCM - INTELLIGENT KEY)".

Is the inspection result normal?

YES >> GO TO 2.
NO >> Set “AUTO LOCK SET” setting in “WORK SUPPORT”.

2. CONFIRM THE OPERATION

Confirm the operation again.

Is the result normal?

YES >> Check intermittent incident. Refer to GI-35, "Intermittent Incident".
NO >> GO TO 1.

DOOR DOES NOT LOCK/UNLOCK WITH DOOR REQUEST SWITCH

DRIVER SIDE

DRIVER SIDE : Description

INFOID:0000000003795004

NOTE:
- Before performing the diagnosis in the following procedure, check “Work Flow”. Refer to DLK-7, "Work Flow".
- Check that vehicle is under the condition shown in “Conditions of vehicle” before starting diagnosis, and check each symptom.

CONDITIONS OF VEHICLE (OPERATING CONDITIONS)
- Intelligent Key is removed from key slot.
- Ignition switch is in OFF position.
- No Intelligent Keys are inside the vehicle.

DRIVER SIDE : Diagnosis Procedure

INFOID:0000000003795005

1. CHECK REMOTE KEYLESS ENTRY FUNCTION

Check remote keyless entry function.

Does door lock/unlock with Intelligent Key button?

YES >> GO TO 2.
NO >> Go to DLK-158, "Description".

2. CHECK “LOCK/UNLOCK BY I-KEY” SETTING IN “WORK SUPPORT”

Check “LOCK/UNLOCK BY I-KEY” in “WORK SUPPORT”.
Refer to DLK-43, "INTELLIGENT KEY : CONSULT-III Function (BCM - INTELLIGENT KEY)".

Is the inspection result normal?

YES >> GO TO 3.
NO >> Set “LOCK/UNLOCK BY I-KEY” in “WORK SUPPORT”.

3. CHECK DOOR REQUEST SWITCH

Check door request switch (driver side).
Refer to DLK-72, "Component Function Check".

Is the inspection result normal?

YES >> GO TO 4.
NO >> Repair or replace the malfunctioning parts.

4. CHECK OUTSIDE KEY ANTENNA

Check outside key antenna (driver side).
Refer to DLK-80, "Component Function Check".

Is the inspection result normal?

YES >> GO TO 5.
NO >> Repair or replace the malfunctioning parts.

5. CONFIRM THE OPERATION

Confirm the operation again.

Is the result normal?

YES >> Check Intermittent Incident. Refer to GI-35, "Intermittent Incident".
NO >> GO TO 1.

PASSENGER SIDE

PASSENGER SIDE : Description

INFOID:0000000003795006

NOTE:
- Before performing the diagnosis in the following procedure, check “Work Flow”. Refer to DLK-7, "Work Flow".

- Check that vehicle is under the condition shown in “Conditions of vehicle” before starting diagnosis, and check each symptom.

CONDITIONS OF VEHICLE (OPERATING CONDITIONS)

- Intelligent Key is removed from key slot.
- Ignition switch is in the OFF position.
- No Intelligent Keys are inside the vehicle.

PASSENGER SIDE : Diagnosis Procedure

INFOID:0000000003795007

1. CHECK REMOTE KEYLESS ENTRY FUNCTION

Check remote keyless entry function.

Does door lock/unlock with Intelligent key button?

YES >> GO TO 2.
NO >> Go to DLK-158, "Description".

2. CHECK “LOCK/UNLOCK BY I-KEY” SETTING IN “WORK SUPPORT”

Check “LOCK/UNLOCK BY I-KEY” in “WORK SUPPORT”.
Refer to DLK-43, "INTELLIGENT KEY : CONSULT-III Function (BCM - INTELLIGENT KEY)".

Is the inspection result normal?

YES >> GO TO 3.
NO >> Set “LOCK/UNLOCK BY I-KEY” in “WORK SUPPORT”.

3. CHECK DOOR REQUEST SWITCH

Check door request switch (passenger side).
Refer to DLK-72, "Component Function Check".

Is the inspection result normal?

YES >> GO TO 4.
NO >> Repair or replace the malfunctioning parts.

4. CHECK OUTSIDE KEY ANTENNA

Check outside key antenna (passenger side).
Refer to DLK-80, "Component Function Check".

Is the inspection result normal?

YES >> GO TO 5.
NO >> Repair or replace the malfunctioning parts.

5. CONFIRM THE OPERATION

Confirm the operation again.

Is the result normal?

YES >> Check Intermittent Incident. Refer to GI-35, "Intermittent Incident".
NO >> GO TO 1.

TRUNK

TRUNK : Description

INFOID:0000000003908231

NOTE:

- Before performing the diagnosis in the following table, check “Work Flow”. Refer to DLK-7, "Work Flow".
- Check that vehicle is under the condition shown in “Conditions of vehicle” before starting diagnosis, and check each symptom.

CONDITIONS OF VEHICLE (OPERATING CONDITIONS)

- Door lock function is normal.
- Vehicle speed is less than 5 km/h (3MPH).
- All doors are unlocked.

TRUNK : Diagnosis Procedure

INFOID:0000000003907977

1. CHECK REMOTE KEYLESS ENTRY FUNCTION

Check remote keyless entry function.

Does door lock/unlock with Intelligent key button?

YES >> GO TO 2.
NO >> Go to DLK-67, "Description".

2. CHECK “LOCK/UNLOCK BY I-KEY” SETTING IN “WORK SUPPORT”

Check “LOCK/UNLOCK BY I-KEY” in “WORK SUPPORT”.
Refer to DLK-43, "INTELLIGENT KEY : CONSULT-III Function (BCM - INTELLIGENT KEY)".

Is the inspection result normal?

YES >> GO TO 3.
NO >> Set “LOCK/UNLOCK BY I-KEY” in “WORK SUPPORT”.

3. CHECK TRUNK LID OPENER REQUEST SWITCH

Check trunk lid opener request switch.
Refer to DLK-74, "Component Function Check".

Is the inspection result normal?

YES >> GO TO 4.
NO >> Repair or replace the malfunctioning parts.

4. CHECK OUTSIDE KEY ANTENNA

Check outside key antenna (trunk room).
Refer to DLK-80, "Component Function Check".

Is the inspection result normal?

YES >> GO TO 5.
NO >> Repair or replace the malfunctioning parts.

5. CONFIRM THE OPERATION

Confirm the operation again.

Is the result normal?

YES >> Check Intermittent Incident. Refer to GI-35, "Intermittent Incident".
NO >> GO TO 1.

TRUNK LID DOES NOT OPEN WITH TRUNK LID OPENER SWITCH

Description

INFOID:0000000003843873

NOTE:
- Before performing the diagnosis in the following table, check “Work Flow”. Refer to DLK-7, "Work Flow".
- Check that vehicle is under the condition shown in “Conditions of vehicle” before starting diagnosis, and check each symptom.

CONDITIONS OF VEHICLE (OPERATING CONDITIONS)
- Door lock function is normal.
- Vehicle speed is less than 5 km/h (3 MPH).
- All doors are unlocked.

Diagnosis Procedure

INFOID:0000000003843874

1. CHECK TRUNK LID OPENER SWITCH

Check trunk lid opener switch.
Refer to DLK-70, "Component Function Check".

Is the inspection result normal?

YES >> GO TO 2.
NO >> Repair or replace the malfunctioning parts.

2. CHECK TRUNK LID OPENER ACTUATOR

Check trunk lid opener actuator.
Refer to DLK-65, "Component Function Check".

Is the inspection result normal?

YES >> GO TO 3.
NO >> Repair or replace the malfunctioning parts.

3. CONFIRM THE OPERATION

Confirm the operation again.

Is the result normal?

YES >> Check intermittent incident. Refer to GI-35, "Intermittent Incident".
NO >> GO TO 1.

TRUNK LID DOES NOT OPEN WITH INTELLIGENT KEY

Description

INFOID:0000000003843875

NOTE:
- Before performing the diagnosis in the following table, check “Work Flow”. Refer to DLK-7, "Work Flow".
- Check that vehicle is under the condition shown in “Conditions of vehicle” before starting diagnosis, and check each symptom.

CONDITIONS OF VEHICLE (OPERATING CONDITIONS)
- Door lock function is normal.
- Vehicle speed is less than 5 km/h (3MPH).
- All doors are unlocked.

Diagnosis Procedure

INFOID:0000000003843876

1. CHECK “TRUNK OPEN DELAY” SETTING IN “WORK SUPPORT”

Check “TRUNK OPEN DELAY” setting in “WORK SUPPORT”.
Refer to DLK-43, "INTELLIGENT KEY : CONSULT-III Function (BCM - INTELLIGENT KEY)".

Is the inspection result normal?

YES >> GO TO 2.
NO >> Set “TRUNK OPEN DELAY” setting in “WORK SUPPORT”.

2. CONFIRM THE OPERATION

Confirm the operation again.

Is the result normal?

YES >> Check intermittent incident. Refer to GI-35, "Intermittent Incident".
NO >> GO TO 1.

TRUNK LID DOES NOT OPEN WITH TRUNK LID OPENER REQUEST SWITCH

Description

INFOID:0000000003843877

NOTE:
- Before performing the diagnosis in the following table, check “Work Flow”. Refer to DLK-7, "Work Flow".
- Check that vehicle is under the condition shown in “Conditions of vehicle” before starting diagnosis, and check each symptom.

CONDITIONS OF VEHICLE (OPERATING CONDITIONS)
- Door lock function is normal.
- Vehicle speed is less than 5 km/h (3 MPH).
- All doors are unlocked.

Diagnosis Procedure

INFOID:0000000003843878

1. CHECK “TRUNK OPEN DELAY” SETTING IN “WORK SUPPORT”

Check “TRUNK OPEN DELAY” setting in “WORK SUPPORT”.
Refer to DLK-43, "INTELLIGENT KEY : CONSULT-III Function (BCM - INTELLIGENT KEY)".

Is the inspection result normal?

YES >> GO TO 2.
NO >> Set “TRUNK OPEN DELAY” setting in “WORK SUPPORT”.

2. CHECK TRUNK LID OPENER REQUEST SWITCH

Check trunk lid opener request switch.
Refer to DLK-74, "Component Function Check".

Is the inspection result normal?

YES >> GO TO 3.
NO >> Repair or replace the malfunctioning parts.

3. CHECK OUTSIDE KEY ANTENNA (REAR BUMPER)

Check outside key antenna (rear bumper).
Refer to DLK-80, "Component Function Check".

Is the inspection result normal?

YES >> GO TO 4.
NO >> Repair or replace the malfunctioning parts.

4. CONFIRM THE OPERATION

Confirm the operation again.

Is the result normal?

YES >> Check intermittent incident. Refer to GI-35, "Intermittent Incident".
NO >> GO TO 1.

HAZARD AND BUZZER REMINDER DOES NOT OPERATE

Description

INFOID:0000000003795012

NOTE:
- Before performing the diagnosis in the following procedure, check “Work Flow”. Refer to DLK-7, "Work Flow".
- Check that vehicle is under the condition shown in “Conditions of vehicle” before starting diagnosis, and check each symptom.

CONDITIONS OF VEHICLE (OPERATING CONDITIONS)
- Intelligent Key is removed from key slot.
- Ignition switch is in OFF position.
- No Intelligent Keys are inside the vehicle.

Diagnosis Procedure

INFOID:0000000003795013

1. CHECK “HAZARD ANSWER BACK” SETTING IN “WORK SUPPORT”

Check “HAZARD ANSWER BACK” setting in “WORK SUPPORT”.
Refer to DLK-42, "DOOR LOCK : CONSULT-III Function (BCM - DOOR LOCK)".

Is the inspection result normal?

YES >> GO TO 2.
NO >> Set “HAZARD ANSWER BACK” in “WORK SUPPORT”.

2. CHECK “ANS BACK I-KEY LOCK” SETTING IN “WORK SUPPORT”

Check “ANS BACK I-KEY LOCK” setting in “WORK SUPPORT”.
Refer to DLK-42, "DOOR LOCK : CONSULT-III Function (BCM - DOOR LOCK)".

Is the inspection result normal?

YES >> GO TO 3.
NO >> Set “ANS BACK I-KEY LOCK” in “WORK SUPPORT”.

3. CHECK “ANS BACK I-KEY UNLOCK” SETTING IN “WORK SUPPORT”

Check “ANS BACK I-KEY UNLOCK” setting in “WORK SUPPORT”.
Refer to DLK-42, "DOOR LOCK : CONSULT-III Function (BCM - DOOR LOCK)".

Is the inspection result normal?

YES >> GO TO 4.
NO >> Set “ANS BACK I-KEY UNLOCK” in “WORK SUPPORT”.

4. CHECK HAZARD WARNING LAMP

Check hazard warning lamp.
Refer to DLK-96, "Component Function Check".

Is the inspection result normal?

YES >> GO TO 5.
NO >> Repair or replace the malfunctioning parts.

5. CHECK INTELLIGENT KEY WARNING BUZZER

Check Intelligent Key warning buzzer.
Refer to DLK-82, "Component Function Check".

Is the inspection result normal?

YES >> GO TO 6.
NO >> Repair or replace the malfunctioning parts.

6. CONFIRM THE OPERATION

Confirm the operation again.

Is the result normal?

YES >> Check intermittent incident. Refer to GI-35, "Intermittent Incident".
NO >> GO TO 1.

KEY REMINDER FUNCTION DOES NOT OPERATE

Description

INFOID:0000000003795014

NOTE:
- Before performing the diagnosis in the following procedure, check “Work Flow”. Refer to DLK-7, "Work Flow".
- Understand how the operation when properly functions. Refer to DLK-28, "KEY REMINDER FUNCTION : System Description".

Diagnosis Procedure

INFOID:0000000003795015

1. CHECK “ANTI KEY LOCK IN FUNCTI” SETTING IN “WORK SUPPORT”

Check “ANTI KEY LOCK IN FUNCTI” setting in “WORK SUPPORT”.
Refer to DLK-43, "INTELLIGENT KEY : CONSULT-III Function (BCM - INTELLIGENT KEY)".

Is the inspection result normal?

YES >> GO TO 2.
NO >> Set “ANTI KEY LOCK IN FUNCTI” setting in “WORK SUPPORT”.

2. CHECK DOOR SWITCH

Check door switch.
Refer to DLK-57, "Component Function Check".

Is the inspection result normal?

YES >> GO TO 3.
NO >> Repair or replace the malfunctioning parts.

3. CHECK INSIDE KEY ANTENNA

Check inside key antenna.
Refer to DLK-50, "DTC Logic" (instrument center).
Refer to DLK-52, "DTC Logic" (console).
Refer to DLK-54, "DTC Logic" (trunk room).

Is the inspection result normal?

YES >> GO TO 4.
NO >> Repair or replace the malfunctioning parts.

4. CHECK UNLOCK SENSOR

Check unlock sensor.
Refer to DLK-78, "Component Function Check".

Is the inspection result normal?

YES >> GO TO 5.
NO >> Repair or replace the malfunctioning parts.

5. CONFIRM THE OPERATION

Confirm the operation again.

Is the result normal?

YES >> Check intermittent incident. Refer to GI-35, "Intermittent Incident".
NO >> GO TO 1.

KEY WARNING DOES NOT OPERATE

Description

INFOID:0000000003795016

NOTE:
- Before performing the diagnosis in the following procedure, check “Work Flow”. Refer to DLK-7, "Work Flow".
- Warning functions operating condition is extremely complicated, during operating confirmations, reconfirm the list above twice in order to ensure proper operation. Refer to DLK-31, "WARNING FUNCTION : System Description".
- Door lock function is normal.

Diagnosis Procedure

INFOID:0000000003795017

1. CHECK BUZZER (COMBINATION METER)

Check buzzer (combination meter).
Refer to DLK-94, "Component Function Check".

Is the inspection result normal?

YES >> GO TO 2.
NO >> Repair or replace the malfunctioning parts.

2. CHECK DOOR SWITCH

Check door switch (driver side).
Refer to DLK-57, "Component Function Check".

Is the inspection result normal?

YES >> GO TO 3.
NO >> Repair or replace the malfunctioning parts.

3. CHECK KEY SLOT

Check key slot.
Refer to DLK-86, "Component Function Check".

Is the inspection result normal?

YES >> GO TO 4.
NO >> Repair or replace the malfunctioning parts.

4. CHECK COMBINATION METER DISPLAY

Check combination meter display.
Refer to DLK-93, "Component Function Check".

Is the inspection result normal?

YES >> GO TO 5.
NO >> Repair or replace the malfunctioning parts.

5. CHECK KEY SLOT ILLUMINATION

Check key slot illumination.
Refer to DLK-88, "Component Function Check".

Is the inspection result normal?

YES >> GO TO 6.
NO >> Repair or replace the malfunctioning parts.

6. CONFIRM THE OPERATION

Confirm the operation again.

Is the result normal?

YES >> Check intermittent incident. Refer to GI-35, "Intermittent Incident".
NO >> GO TO 1.

OFF POSITION WARNING DOES NOT OPERATE

Description

INFOID:0000000003795018

NOTE:
- Before performing the diagnosis in the following procedure, check “Work Flow”. Refer to DLK-7, "Work Flow".
- Warning functions operating condition is extremely complicated, during operating confirmations, reconfirm the list above twice in order to ensure proper operation. Refer to DLK-31, "WARNING FUNCTION : System Description".
- Door lock function is normal.

Diagnosis Procedure

INFOID:0000000003795019

1. CHECK POWER POSITION

Check if ignition switch position is changing or not.

Does ignition switch position change?

YES >> GO TO 2.
NO >> Check DTC for BCM. Refer to DLK-153, "DTC Index".

2. CHECK BUZZER (COMBINATION METER)

Check buzzer (combination meter).
Refer to DLK-94, "Component Function Check".

Is the inspection result normal?

YES >> GO TO 3.
NO >> Repair or replace the malfunctioning parts.

3. CHECK INTELLIGENT KEY WARNING BUZZER

Check Intelligent Key warning buzzer.
Refer to DLK-82, "Component Function Check".

Is the inspection result normal?

YES >> GO TO 4.
NO >> Repair or replace the malfunctioning parts.

4. CHECK DOOR SWITCH

Check door switch (driver side).
Refer to DLK-57, "Component Function Check".

Is the inspection result normal?

YES >> GO TO 5.
NO >> Repair or replace the malfunctioning parts.

5. CONFIRM THE OPERATION

Confirm the operation again.

Is the result normal?

YES >> Check intermittent incident. Refer to GI-35, "Intermittent Incident".
NO >> GO TO 1.

P POSITION WARNING DOES NOT OPERATE

Description

INFOID:0000000003795020

NOTE:
- Before performing the diagnosis in the following procedure, check “Work Flow”. Refer to DLK-7, "Work Flow".
- Warning functions operating condition is extremely complicated, during operating confirmations, reconfirm the list above twice in order to ensure proper operation. Refer to DLK-31, "WARNING FUNCTION : System Description".
- Door lock function is normal.

Diagnosis Procedure

INFOID:0000000003795021

1. CHECK DETENTION SWITCH

Check DTC for BCM.
Refer to DLK-153, "DTC Index".

Is the inspection result normal?

YES >> GO TO 2.
NO >> Repair or replace the malfunctioning parts.

2. CHECK BUZZER (COMBINATION METER)

Check buzzer (combination meter).
Refer to DLK-94, "Component Function Check".

Is the inspection result normal?

YES >> GO TO 3.
NO >> Repair or replace the malfunctioning parts.

3. CHECK INTELLIGENT KEY WARNING BUZZER

Check Intelligent Key warning buzzer.
Refer to DLK-82, "Component Function Check".

Is the inspection result normal?

YES >> GO TO 4.
NO >> Repair or replace the malfunctioning parts.

4. CHECK DOOR SWITCH

Check door switch (driver side).
Refer to DLK-57, "Component Function Check".

Is the inspection result normal?

YES >> GO TO 5.
NO >> Repair or replace the malfunctioning parts.

5. CHECK INSIDE KEY ANTENNA

Check inside key antenna.
Refer to DLK-50, "DTC Logic" (instrument center).
Refer to DLK-52, "DTC Logic" (console).
Refer to DLK-54, "DTC Logic" (trunk room).

Is the inspection result normal?

YES >> GO TO 6.
NO >> Repair or replace the malfunctioning parts.

6. CHECK COMBINATION METER DISPLAY

Check combination meter display.
Refer to DLK-93, "Component Function Check".

Is the inspection result normal?

YES >> GO TO 7.
NO >> Repair or replace the malfunctioning parts.

7. CONFIRM THE OPERATION

Confirm the operation again.

Is the result normal?

YES >> Check intermittent incident. Refer to GI-35, "Intermittent Incident".
NO >> GO TO 1.

ACC WARNING DOES NOT OPERATE

Description

INFOID:0000000003795022

NOTE:
- Before performing the diagnosis in the following procedure, check “Work Flow”. Refer to DLK-7, "Work Flow".
- Warning functions operating condition is extremely complicated, during operating confirmations, reconfirm the list above twice in order to ensure proper operation. Refer to DLK-31, "WARNING FUNCTION : System Description".
- Door lock function is normal.

Diagnosis Procedure

INFOID:0000000003795023

1. CHECK POWER POSITION

Check if ignition switch position is changing or not.

Does ignition switch position change?

YES >> GO TO 2.
NO >> Check DTC for BCM. Refer to DLK-153, "DTC Index".

2. CHECK BUZZER (COMBINATION METER)

Check buzzer (combination meter).
Refer to DLK-94, "Component Function Check".

Is the inspection result normal?

YES >> GO TO 3.
NO >> Repair or replace the malfunctioning parts.

3. CHECK COMBINATION METER DISPLAY FUNCTION

Check combination meter display function.
Refer to DLK-93, "Component Function Check".

Is the inspection result normal?

YES >> GO TO 4.
NO >> Repair or replace the malfunctioning parts.

4. CONFIRM THE OPERATION

Confirm the operation again.

Is the result normal?

YES >> Check intermittent incident. Refer to GI-35, "Intermittent Incident".
NO >> GO TO 1.

TAKE AWAY WARNING DOES NOT OPERATE

DOOR IS OPEN

DOOR IS OPEN : Description

INFOID:0000000003795024

NOTE:
- Before performing the diagnosis in the following procedure, check “Work Flow”. Refer to DLK-7, "Work Flow".
- Warning functions operating condition is extremely complicated, during operating confirmations, reconfirm the list above twice in order to ensure proper operation. Refer to DLK-31, "WARNING FUNCTION : System Description".
- Door lock function is normal.

DOOR IS OPEN : Diagnosis Procedure

INFOID:0000000003795025

1. CHECK POWER POSITION

Check if ignition switch position is changing or not.

Does ignition switch position change?

YES >> GO TO 2.
NO >> Check DTC for BCM. Refer to DLK-153, "DTC Index".

2. CHECK BUZZER (COMBINATION METER)

Check buzzer (combination meter).
Refer to DLK-94, "Component Function Check".

Is the inspection result normal?

YES >> GO TO 3.
NO >> Repair or replace the malfunctioning parts.

3. CHECK COMBINATION METER DISPLAY

Check combination meter display.
Refer to DLK-93, "Component Function Check".

Is the inspection result normal?

YES >> GO TO 4.
NO >> Repair or replace the malfunctioning parts.

4. CHECK DOOR SWITCH

Check door switch (driver side).
Refer to DLK-57, "Component Function Check".

Is the inspection result normal?

YES >> GO TO 5.
NO >> Repair or replace the malfunctioning parts.

5. CHECK INTELLIGENT KEY WARNING BUZZER

Check Intelligent Key warning buzzer.
Refer to DLK-82, "Component Function Check".

Is the inspection result normal?

YES >> GO TO 6.
NO >> Repair or replace the malfunctioning parts.

6. CHECK INSIDE KEY ANTENNA

Check inside key antenna.
Refer to DLK-50, "DTC Logic" (instrument center).
Refer to DLK-52, "DTC Logic" (console).
Refer to DLK-54, "DTC Logic" (trunk room).

Is the inspection result normal?

YES >> GO TO 7.
NO >> Repair or replace the malfunctioning parts.

7. CHECK KEY SLOT ILLUMINATION

Check key slot illumination.
Refer to DLK-88, "Component Function Check".

Is the inspection result normal?

YES >> GO TO 8.
NO >> Repair or replace the malfunctioning parts.

8. CONFIRM THE OPERATION

Confirm the operation again.

Is the result normal?

YES >> Check intermittent incident. Refer to GI-35, "Intermittent Incident".
NO >> GO TO 1.

ANY DOOR OPEN TO ALL DOORS CLOSED

ANY DOOR OPEN TO ALL DOORS CLOSED : Description

INFOID:0000000003795026

NOTE:
- Before performing the diagnosis in the following procedure, check “Work Flow”. Refer to DLK-7, "Work Flow".
- Warning functions operating condition is extremely complicated, during operating confirmations, reconfirm the list above twice in order to ensure proper operation. Refer to DLK-31, "WARNING FUNCTION : System Description".
- Door lock function is normal.

ANY DOOR OPEN TO ALL DOORS CLOSED : Diagnosis Procedure

INFOID:0000000003795027

1. CHECK DOOR SWITCH

Check door switch (driver side).
Refer to DLK-57, "Component Function Check".

Is the inspection result normal?

YES >> GO TO 2.
NO >> Repair or replace the malfunctioning parts.

2. CHECK COMBINATION METER DISPLAY

Check combination meter display.
Refer to DLK-93, "Component Function Check".

Is the inspection result normal?

YES >> GO TO 3.
NO >> Repair or replace the malfunctioning parts.

3. CHECK INSIDE KEY ANTENNA

Check inside key antenna.
Refer to DLK-50, "DTC Logic" (instrument center).
Refer to DLK-52, "DTC Logic" (console).
Refer to DLK-54, "DTC Logic" (trunk room).

Is the inspection result normal?

YES >> GO TO 4.
NO >> Repair or replace the malfunctioning parts.

4. CONFIRM THE OPERATION

Confirm the operation again.

Is the result normal?

YES >> Check intermittent incident. Refer to GI-35, "Intermittent Incident".
NO >> GO TO 1.

PUSH-BUTTON IGNITION SWITCH OPERATION

PUSH-BUTTON IGNITION SWITCH OPERATION : Description

INFOID:0000000003795028

NOTE:
- Before performing the diagnosis in the following procedure, check “Work Flow”. Refer to DLK-7, "Work Flow".
- Warning functions operating condition is extremely complicated, during operating confirmations, reconfirm the list above twice in order to ensure proper operation. Refer to DLK-31, "WARNING FUNCTION : System Description".
- Door lock function is normal.

PUSH-BUTTON IGNITION SWITCH OPERATION : Diagnosis Procedure

INFOID:0000000003795029

1. CHECK POWER POSITION

Check if ignition switch position is changing or not.

Does ignition switch position change?

YES >> GO TO 2.
NO >> Check DTC for BCM. Refer to DLK-153, "DTC Index".

2. CHECK PUSH-BUTTON IGNITION SWITCH

Check push-button ignition switch.
Refer to PCS-63, "Component Function Check".

Is the inspection result normal?

YES >> GO TO 3.
NO >> Repair or replace the malfunctioning parts.

3. CHECK BUZZER (COMBINATION METER)

Check buzzer (combination meter).
Refer to DLK-94, "Component Function Check".

Is the inspection result normal?

YES >> GO TO 4.
NO >> Repair or replace the malfunctioning parts.

4. CHECK COMBINATION METER DISPLAY

Check combination meter display.
Refer to DLK-93, "Component Function Check".

Is the inspection result normal?

YES >> GO TO 5.
NO >> Repair or replace the malfunctioning parts.

5. CHECK INSIDE KEY ANTENNA

Check inside key antenna.
Refer to DLK-50, "DTC Logic" (instrument center).
Refer to DLK-52, "DTC Logic" (console).
Refer to DLK-54, "DTC Logic" (trunk room).

Is the inspection result normal?

YES >> GO TO 6.
NO >> Repair or replace the malfunctioning parts.

6. CONFIRM THE OPERATION

Confirm the operation again.

Is the result normal?

YES >> Check intermittent incident. Refer to GI-35, "Intermittent Incident".
NO >> GO TO 1.

INTELLIGENT KEY IS REMOVED FROM KEY SLOT

INTELLIGENT KEY IS REMOVED FROM KEY SLOT : Description

INFOID:0000000003795032

NOTE:

- Before performing the diagnosis in the following procedure, check “Work Flow”. Refer to DLK-7, "Work Flow".
- Warning functions operating condition is extremely complicated, during operating confirmations, reconfirm the list above twice in order to ensure proper operation. Refer to DLK-31, "WARNING FUNCTION : System Description".
- Door lock function is normal.

INTELLIGENT KEY IS REMOVED FROM KEY SLOT : Diagnosis Procedure

INFOID:0000000003795033

1. CHECK KEY SLOT

Check key slot.
Refer to DLK-86, "Component Function Check".

Is the inspection result normal?

YES >> GO TO 2.
NO >> Repair or replace the malfunctioning parts.

2. CHECK COMBINATION METER DISPLAY

Check combination meter display.
Refer to DLK-93, "Component Function Check".

Is the inspection result normal?

YES >> GO TO 3.
NO >> Repair or replace the malfunctioning parts.

3. CHECK INSIDE KEY ANTENNA

Check inside key antenna.
Refer to DLK-50, "DTC Logic" (instrument center).
Refer to DLK-52, "DTC Logic" (console).
Refer to DLK-54, "DTC Logic" (trunk room).

Is the inspection result normal?

YES >> GO TO 4.
NO >> Repair or replace the malfunctioning parts.

4. CHECK KEY SLOT ILLUMINATION

Check key slot illumination.
Refer to DLK-88, "Component Function Check".

Is the inspection result normal?

YES >> GO TO 5.
NO >> Repair or replace the malfunctioning parts.

5. CONFIRM THE OPERATION

Confirm the operation again.

Is the result normal?

YES >> Check intermittent incident. Refer to GI-35, "Intermittent Incident".
NO >> GO TO 1.

INTELLIGENT KEY LOW BATTERY WARNING DOES NOT OPERATE

Description

INFOID:0000000003795034

NOTE:
- Before performing the diagnosis in the following procedure, check “Work Flow”. Refer to DLK-7, "Work Flow".
- Warning functions operating condition is extremely complicated, during operating confirmations, reconfirm the list above twice in order to ensure proper operation. Refer to DLK-31, "WARNING FUNCTION : System Description".

Diagnosis Procedure

INFOID:0000000003795035

1. CHECK “LO- BATT OF KEY FOB WARN” SETTING IN “WORK SUPPORT”

Check “LO- BATT OF KEY FOB WARN” setting in “WORK SUPPORT”.
Refer to DLK-43, "INTELLIGENT KEY : CONSULT-III Function (BCM - INTELLIGENT KEY)".

Is the inspection result normal?

YES >> GO TO 2.
NO >> Set “LO- BATT OF KEY FOB WARN” setting in “WORK SUPPORT”.

2. CHECK INTELLIGENT KEY BATTERY

Check Intelligent Key battery.
Refer to DLK-84, "Component Function Check".

Is the inspection result normal?

YES >> GO TO 3.
NO >> Repair or replace the malfunctioning parts.

3. CHECK COMBINATION METER DISPLAY

Check combination meter display.
Refer to DLK-93, "Component Function Check".

Is the inspection result normal?

YES >> GO TO 4.
NO >> Repair or replace the malfunctioning parts.

4. CHECK INSIDE KEY ANTENNA

Check inside key antenna.
Refer to DLK-50, "DTC Logic" (instrument center).
Refer to DLK-52, "DTC Logic" (console).
Refer to DLK-54, "DTC Logic" (trunk room).

Is the inspection result normal?

YES >> GO TO 5.
NO >> Repair or replace the malfunctioning parts.

5. CHECK KEY SLOT ILLUMINATION

Check key slot illumination.
Refer to DLK-88, "Component Function Check".

Is the inspection result normal?

YES >> GO TO 6.
NO >> Repair or replace the malfunctioning parts.

6. CONFIRM THE OPERATION

Confirm the operation again.

Is the result normal?

YES >> Check intermittent incident. Refer to GI-35, "Intermittent Incident".
NO >> GO TO 1.

DOOR LOCK OPERATION WARNING DOES NOT OPERATE WITH DOOR REQUEST SWITCH

Description

INFOID:0000000003795036

NOTE:
- Before performing the diagnosis in the following procedure, check “Work Flow”. Refer to DLK-7, "Work Flow".
- Warning functions operating condition is extremely complicated, during operating confirmations, reconfirm the list above twice in order to ensure proper operation. Refer to DLK-31, "WARNING FUNCTION : System Description".

Diagnosis Procedure

INFOID:0000000003795037

1. CHECK DOOR LOCK FUNCTION

Check door lock function by door request switch.

Does door lock/unlock with door request switch?

YES >> GO TO 2.
NO >>
- Go to DLK-161, "DRIVER SIDE : Description" (driver side).
- Go to DLK-161, "PASSENGER SIDE : Description" (passenger side).
- Go to DLK-162, "TRUNK : Description" (trunk room).

2. CHECK DOOR SWITCH

Check door switch (driver side).
Refer to DLK-57, "Component Function Check".

Is the inspection result normal?

YES >> GO TO 3.
NO >> Repair or replace the malfunctioning parts.

3. CHECK INTELLIGENT KEY WARNING BUZZER

Check Intelligent Key warning buzzer.
Refer to DLK-82, "Component Function Check".

Is the inspection result normal?

YES >> GO TO 4.
NO >> Repair or replace the malfunctioning parts.

4. CHECK INSIDE KEY ANTENNA

Check inside key antenna.
Refer to DLK-50, "DTC Logic" (instrument center).
Refer to DLK-52, "DTC Logic" (console).
Refer to DLK-54, "DTC Logic" (trunk room).

Is the inspection result normal?

YES >> GO TO 5.
NO >> Repair or replace the malfunctioning parts.

5. CONFIRM THE OPERATION

Confirm the operation again.

Is the result normal?

YES >> Check intermittent incident. Refer to GI-35, "Intermittent Incident".
NO >> GO TO 1.

KEY ID WARNING DOES NOT OPERATE

Description

INFOID:0000000003795038

NOTE:
- Before performing the diagnosis in the following procedure, check “Work Flow”. Refer to DLK-7, "Work Flow".
- Warning functions operating condition is extremely complicated, during operating confirmations, reconfirm the list above twice in order to ensure proper operation. Refer to DLK-31, "WARNING FUNCTION : System Description".

Diagnosis Procedure

INFOID:0000000003795039

1. CHECK INTELLIGENT KEY

Check Intelligent Key.
Refer to DLK-84, "Component_Function_Check".

Is the inspection result normal?

YES >> GO TO 2.
NO >> Repair or replace the malfunctioning parts.

2. CHECK COMBINATION METER DISPLAY FUNCTION

Check combination meter display function.
Refer to DLK-93, "Component_Function_Check".

Is the inspection result normal?

YES >> GO TO 3.
NO >> Repair or replace the malfunctioning parts.

3. CONFIRM THE OPERATION

Confirm the operation again.

Is the result normal?

YES >> Check intermittent incident. Refer to GI-35, "Intermittent Incident".
NO >> GO TO 1.

INTELLIGENT KEY LOW BATTERY WARNING DOES NOT OPERATE

Description

INFOID:0000000003795040

NOTE:
- Before performing the diagnosis in the following procedure, check “Work Flow”. Refer to DLK-7, "Work Flow".
- Warning functions operating condition is extremely complicated, during operating confirmations, reconfirm the list above twice in order to ensure proper operation. Refer to DLK-31, "WARNING FUNCTION : System Description".

Diagnosis Procedure

INFOID:0000000003795041

1. CHECK INTELLIGENT KEY

Check Intelligent Key.
Refer to DLK-84, "Component Function Check".

Is the inspection result normal?

YES >> GO TO 2.
NO >> Repair or replace the malfunctioning parts.

2. CHECK COMBINATION METER DISPLAY FUNCTION

Check combination meter display function.
Refer to DLK-93, "Component Function Check".

Is the inspection result normal?

YES >> GO TO 3.
NO >> Repair or replace the malfunctioning parts.

3. CONFIRM THE OPERATION

Confirm the operation again.

Is the result normal?

YES >> Check intermittent incident. Refer to GI-35, "Intermittent Incident".
NO >> GO TO 1.

SQUEAK AND RATTLE TROUBLE DIAGNOSES

Work Flow

INFOID:0000000003941377

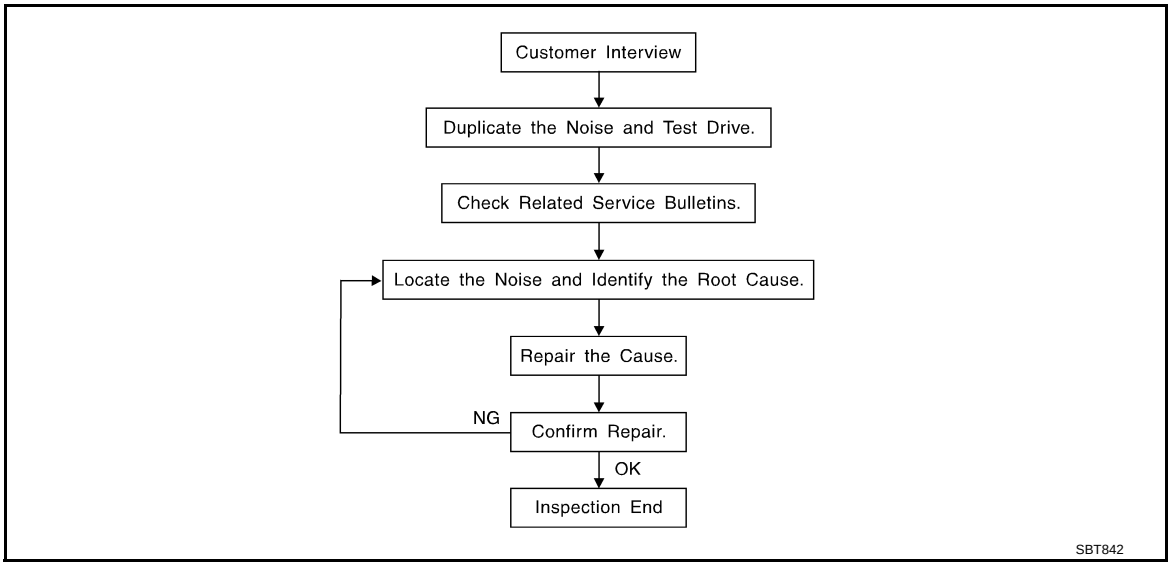

CUSTOMER INTERVIEW

Interview the customer if possible, to determine the conditions that exist when the noise occurs. Use the Diagnostic Worksheet during the interview to document the facts and conditions when the noise occurs and any of the customer's comments; refer to DLK-186, "Diagnostic Worksheet". This information is necessary to duplicate the conditions that exist when the noise occurs.

- The customer may not be able to provide a detailed description or the location of the noise. Attempt to obtain all the facts and conditions that exist when the noise occurs (or does not occur).
- If there is more than one noise in the vehicle, be sure to diagnose and repair the noise that the customer is concerned about. This can be accomplished by a test drive with the customer.
- After identifying the type of noise, isolate the noise in terms of its characteristics. The noise characteristics are provided so the customer, service adviser and technician are all speaking the same language when defining the noise.
- Squeak – (Like tennis shoes on a clean floor)
  Squeak characteristics include the light contact/fast movement/brought on by road conditions/hard surfaces = higher pitch noise/softer surfaces = lower pitch noises/edge to surface = chirping
- Creak – (Like walking on an old wooden floor)
  Creak characteristics include firm contact/slow movement/twisting with a rotational movement/pitch dependent on materials/often brought on by activity.
- Rattle – (Like shaking a baby rattle)
  Rattle characteristics include the fast repeated contact/vibration or similar movement/loose parts/missing clip or fastener/incorrect clearance.
- Knock – (Like a knock on a door)
  Knock characteristics include hollow sounding/sometimes repeating/often brought on by driver action.
- Tick – (Like a clock second hand)
  Tick characteristics include gentle contacting of light materials/loose components/can be caused by driver action or road conditions.
- Thump – (Heavy, muffled knock noise)
  Thump characteristics include softer knock/dead sound often brought on by activity.
- Buzz – (Like a bumble bee)
  Buzz characteristics include high frequency rattle/firm contact.
- Often the degree of acceptable noise level will vary depending upon the person. A noise that a technician may judge as acceptable may be very irritating to the customer.
- Weather conditions, especially humidity and temperature, may have a great effect on noise level.

DUPLICATE THE NOISE AND TEST DRIVE

If possible, drive the vehicle with the customer until the noise is duplicated. Note any additional information on the Diagnostic Worksheet regarding the conditions or location of the noise. This information can be used to duplicate the same conditions when the repair is reconfirmed.

If the noise can be duplicated easily during the test drive, to help identify the source of the noise, try to duplicate the noise with the vehicle stopped by doing one or all of the following:

1) Close a door.
2) Tap or push/pull around the area where the noise appears to be coming from.
3) Rev the engine.
4) Use a floor jack to recreate vehicle “twist”.
5) At idle, apply engine load (electrical load, half-clutch on M/T model, drive position on A/T model).
6) Raise the vehicle on a hoist and hit a tire with a rubber hammer.

- Drive the vehicle and attempt to duplicate the conditions the customer states exist when the noise occurs.
- If it is difficult to duplicate the noise, drive the vehicle slowly on an undulating or rough road to stress the vehicle body.

LOCATE THE NOISE AND IDENTIFY THE ROOT CAUSE

1. Narrow down the noise to a general area. To help pinpoint the source of the noise, use a listening tool (Engine Ear or mechanics stethoscope).
2. Narrow down the noise to a more specific area and identify the cause of the noise by:

- Removing the components in the area that is are suspected to be the cause of the noise.
  Do not use too much force when removing clips and fasteners, otherwise clips and fastener can be broken or lost during the repair, resulting in the creation of new noise.
- Tapping or pushing/pulling the component that is are suspected to be the cause of the noise.
  Do not tap or push/pull the component with excessive force, otherwise the noise will be eliminated only temporarily.
- Feeling for a vibration by hand by touching the component(s) that is are suspected to be the cause of the noise.
- Placing a piece of paper between components that is are suspected to be the cause of the noise.
- Looking for loose components and contact marks.
  Refer to DLK-184, "Inspection Procedure".

REPAIR THE CAUSE

- If the cause is a loose component, tighten the component securely.
- If the cause is insufficient clearance between components:
- Separate components by repositioning or loosening and retightening the component, if possible.
- Insulate components with a suitable insulator such as urethane pads, foam blocks, felt cloth tape or urethane tape. These insulators are available through the authorized Nissan Parts Department.

CAUTION:
Never use excessive force as many components are constructed of plastic and may be damaged.
NOTE:

- URETHANE PADS
  Insulates connectors, harness, etc.
- INSULATOR (Foam blocks)
  Insulates components from contact. Can be used to fill space behind a panel.
- INSULATOR (Light foam block)
- FELT CLOTHTAPE
  Used to insulate where movement does not occur. Ideal for instrument panel applications.
  The following materials, not available through NISSAN Parts Department, can also be used to repair squeaks and rattles.
- UHMW(TEFLON) TAPE
  Insulates where slight movement is present. Ideal for instrument panel applications.
- SILICONE GREASE
  Used in place of UHMW tape that is be visible or does not fit.
  Note: Will only last a few months.
- SILICONE SPRAY
  Used when grease cannot be applied.
- DUCT TAPE
  Used to eliminate movement.

CONFIRM THE REPAIR

Confirm that the cause of a noise is repaired by test driving the vehicle. Operate the vehicle under the same conditions as when the noise originally occurred. Refer to the notes on the Diagnostic Worksheet.

Inspection Procedure

INFOID:0000000003941378

Refer to Table of Contents for specific component removal and installation information.

INSTRUMENT PANEL

Most incidents are caused by contact and movement between:

1. Cluster lid A and instrument panel
2. Acrylic lens and combination meter housing
3. Instrument panel to front pillar garnish
4. Instrument panel to windshield
5. Instrument panel mounting pins
6. Wiring harnesses behind the combination meter
7. A/C defroster duct and duct joint

These incidents can usually be located by tapping or moving the components to duplicate the noise or by pressing on the components while driving to stop the noise. Most of these incidents can be repaired by applying felt cloth tape or silicon spray (in hard to reach areas). Urethane pads can be used to insulate wiring harness.

CAUTION:

Never use silicone spray to isolate a squeak or rattle. If the area is saturated with silicone, the recheck of repair becomes impossible.

CENTER CONSOLE

Components to pay attention to include:

1. Shifter assembly cover to finisher
2. A/C control unit and cluster lid C
3. Wiring harnesses behind audio and A/C control unit

The instrument panel repair and isolation procedures also apply to the center console.

DOORS

Pay attention to the following:

1. Finisher and inner panel making a slapping noise
2. Inside handle escutcheon to door finisher
3. Wiring harnesses tapping
4. Door striker out of alignment causing a popping noise on starts and stops

Tapping or moving the components or pressing on them while driving to duplicate the conditions can isolate many of these incidents. The areas can usually be insulated with felt cloth tape or insulator foam blocks to repair the noise.

TRUNK

Trunk noises are often caused by a loose jack or loose items put into the trunk by the customer.
In addition look for the following:

1. Trunk lid dumpers out of adjustment
2. Trunk lid striker out of adjustment
3. Trunk lid torsion bars knocking together
4. A loose license plate or bracket

Most of these incidents can be repaired by adjusting, securing or insulating the item(s) or component(s) causing the noise.

SUNROOF/HEADLINING

Noises in the sunroof/headlining area can often be traced to one of the following:

1. Sunroof lid, rail, linkage or seals making a rattle or light knocking noise
2. Sunvisor shaft shaking in the holder
3. Front or rear windshield touching headlining and squeaking

Again, pressing on the components to stop the noise while duplicating the conditions can isolate most of these incidents. Repairs usually consist of insulating with felt cloth tape.

SEATS

When isolating seat noise it is important to note the position the seat is in and the load placed on the seat when the noise occurs. These conditions should be duplicated when verifying and isolating the cause of the noise.

Cause of seat noise include:

1. Headrest rods and holder
2. A squeak between the seat pad cushion and frame
3. Rear seatback lock and bracket

These noises can be isolated by moving or pressing on the suspected components while duplicating the conditions under which the noise occurs. Most of these incidents can be repaired by repositioning the component or applying urethane tape to the contact area.

UNDERHOOD

Some interior noise may be caused by components under the hood or on the engine wall. The noise is then transmitted into the passenger compartment.

Causes of transmitted underhood noise include:

1. Any component mounted to the engine wall
2. Components that pass through the engine wall
3. Engine wall mounts and connectors
4. Loose radiator mounting pins
5. Hood bumpers out of adjustment
6. Hood striker out of adjustment

These noises can be difficult to isolate since they cannot be reached from the interior of the vehicle. The best method is to secure, move or insulate one component at a time and test drive the vehicle. Also, engine RPM or load can be changed to isolate the noise. Repairs can usually be made by moving, adjusting, securing, or insulating the component causing the noise.

Diagnostic Worksheet

INFOID:0000000003941379

SQUEAK & RATTLE DIAGNOSTIC WORKSHEET

Dear Nissan Customer:
We are concerned about your satisfaction with your Nissan vehicle. Repairing a squeak or rattle sometimes can be very difficult. To help us fix your Nissan right the first time, please take a moment to note the area of the vehicle where the squeak or rattle occurs and under what conditions. You may be asked to take a test drive with a service advisor or technician to ensure we confirm the noise you are hearing.

I. WHERE DOES THE NOISE COME FROM? (circle the area of the vehicle)
The illustrations are for reference only, and may not reflect the actual configuration of your vehicle.

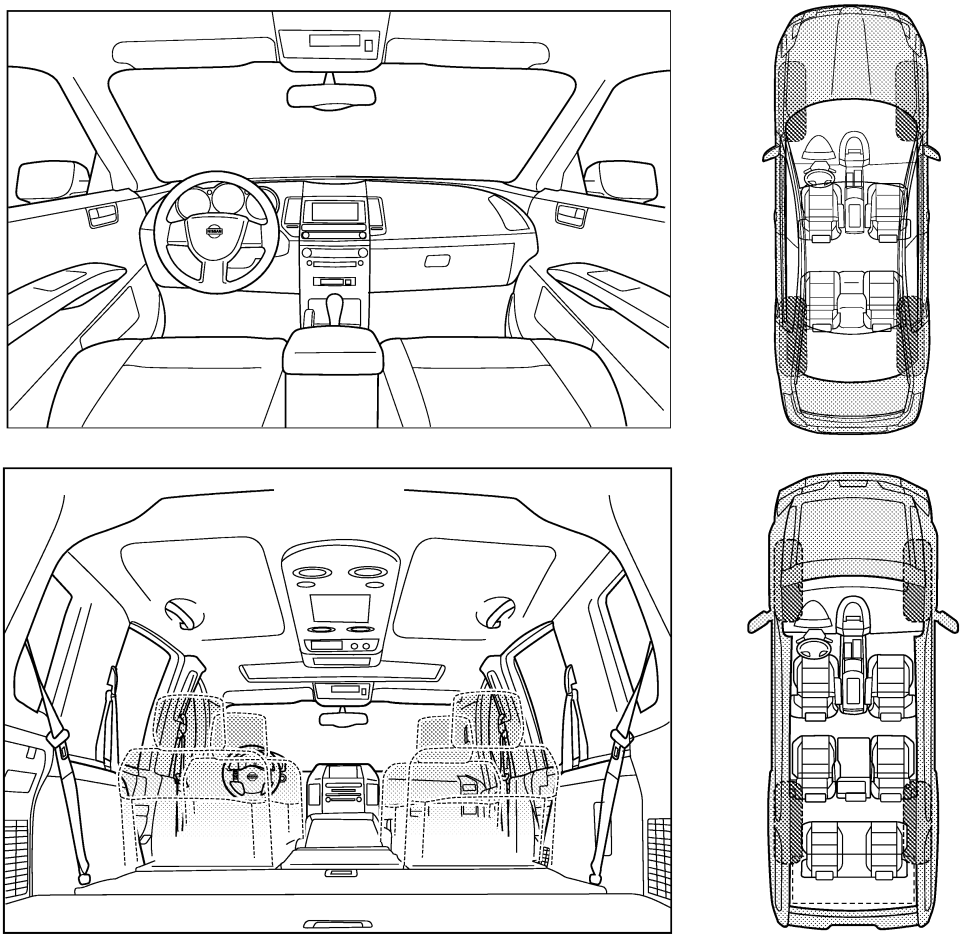

Continue to page 2 of the worksheet and briefly describe the location of the noise or rattle. In addition, please indicate the conditions which are present when the noise occurs.

PIIB8740E

SQUEAK & RATTLE DIAGNOSTIC WORKSHEET - page 2

Briefly describe the location where the noise occurs:

_____

_____

II. WHEN DOES IT OCCUR? (please check the boxes that apply)

- ☐ anytime
- ☐ 1st time in the morning
- ☐ only when it is cold outside
- ☐ only when it is hot outside
- ☐ after sitting out in the rain
- ☐ when it is raining or wet
- ☐ dry or dusty conditions
- ☐ other:

III. WHEN DRIVING:

- ☐ through driveways
- ☐ over rough roads
- ☐ over speed bumps
- ☐ only about ____ mph
- ☐ on acceleration
- ☐ coming to a stop
- ☐ on turns: left, right or either (circle)
- ☐ with passengers or cargo
- ☐ other: _____
- ☐ after driving _____ miles or _____ minutes

IV. WHAT TYPE OF NOISE

- ☐ squeak (like tennis shoes on a clean floor)
- ☐ creak (like walking on an old wooden floor)
- ☐ rattle (like shaking a baby rattle)
- ☐ knock (like a knock at the door)
- ☐ tick (like a clock second hand)
- ☐ thump (heavy, muffled knock noise)
- ☐ buzz (like a bumble bee)

TO BE COMPLETED BY DEALERSHIP PERSONNEL

Test Drive Notes:

_____

_____

_____

	YES	NO	Initials of person performing
Vehicle test driven with customer	☐	☐	_____
- Noise verified on test drive	☐	☐	_____
- Noise source located and repaired	☐	☐	_____
- Follow up test drive performed to confirm repair	☐	☐	_____

VIN: _____ Customer Name: _____

W.O.# _____ Date: _____

This form must be attached to Work Order

PIIB8742E

PRECAUTION

PRECAUTIONS

Precaution for Supplemental Restraint System (SRS) "AIR BAG" and "SEAT BELT PRE-TENSIONER"

INFOID:0000000003941991

The Supplemental Restraint System such as “AIR BAG” and “SEAT BELT PRE-TENSIONER”, used along with a front seat belt, helps to reduce the risk or severity of injury to the driver and front passenger for certain types of collision. Information necessary to service the system safely is included in the “SRS AIRBAG” and “SEAT BELT” of this Service Manual.

WARNING:

- **To avoid rendering the SRS inoperative, which could increase the risk of personal injury or death in the event of a collision which would result in air bag inflation, all maintenance must be performed by an authorized NISSAN/INFINITI dealer.**
- **Improper maintenance, including incorrect removal and installation of the SRS, can lead to personal injury caused by unintentional activation of the system. For removal of Spiral Cable and Air Bag Module, see the “SRS AIRBAG”.**
- **Never use electrical test equipment on any circuit related to the SRS unless instructed to in this Service Manual. SRS wiring harnesses can be identified by yellow and/or orange harnesses or harness connectors.**

Precaution for Procedure without Cowl Top Cover

INFOID:0000000003795058

When performing the procedure after removing cowl top cover, cover the lower end of windshield with urethane, etc.

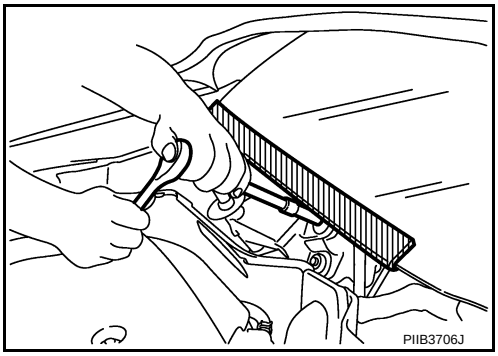

Precaution Necessary for Steering Wheel Rotation after Battery Disconnect

INFOID:0000000003845516

NOTE:

- Before removing and installing any control units, first turn the push-button ignition switch to the LOCK position, then disconnect both battery cables.
- After finishing work, confirm that all control unit connectors are connected properly, then re-connect both battery cables.
- Always use CONSULT-III to perform self-diagnosis as a part of each function inspection after finishing work. If a DTC is detected, perform trouble diagnosis according to self-diagnosis results.

This vehicle is equipped with a push-button ignition switch and a steering lock unit.
If the battery is disconnected or discharged, the steering wheel will lock and cannot be turned.
If turning the steering wheel is required with the battery disconnected or discharged, follow the procedure below before starting the repair operation.

OPERATION PROCEDURE

1. Connect both battery cables.
   NOTE:
   Supply power using jumper cables if battery is discharged.
2. Turn the push-button ignition switch to ACC position.
   (At this time, the steering lock will be released.)
3. Disconnect both battery cables. The steering lock will remain released with both battery cables disconnected and the steering wheel can be turned.
4. Perform the necessary repair operation.

5. When the repair work is completed, re-connect both battery cables. With the brake pedal released, turn the push-button ignition switch from ACC position to ON position, then to LOCK position. (The steering wheel will lock when the push-button ignition switch is turned to LOCK position.)
6. Perform self-diagnosis check of all control units using CONSULT-III.

Work

INFOID:0000000003795060

- After removing and installing the opening/closing parts, be sure to carry out fitting adjustments to check their operational.
- Check the lubrication level, damage, and wear of each part. If necessary, grease or replace it.

PREPARATION

PREPARATION

Commercial Service Tools

INFOID:0000000003795062

Tool name		Description
Engine ear	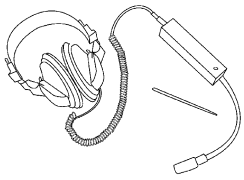 SIIA0995E	Locating the noise
Remover tool	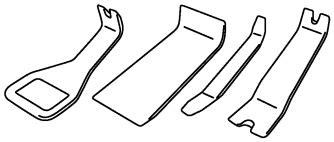 PIIB7923J	Removes the clips, pawls, and metal clips
Power tool	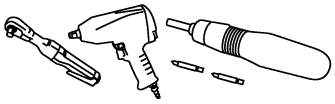 PIIB1407E	

ON-VEHICLE REPAIR

HOOD

HOOD ASSEMBLY

HOOD ASSEMBLY : Exploded View

INFOID:0000000003813383

REMOVAL

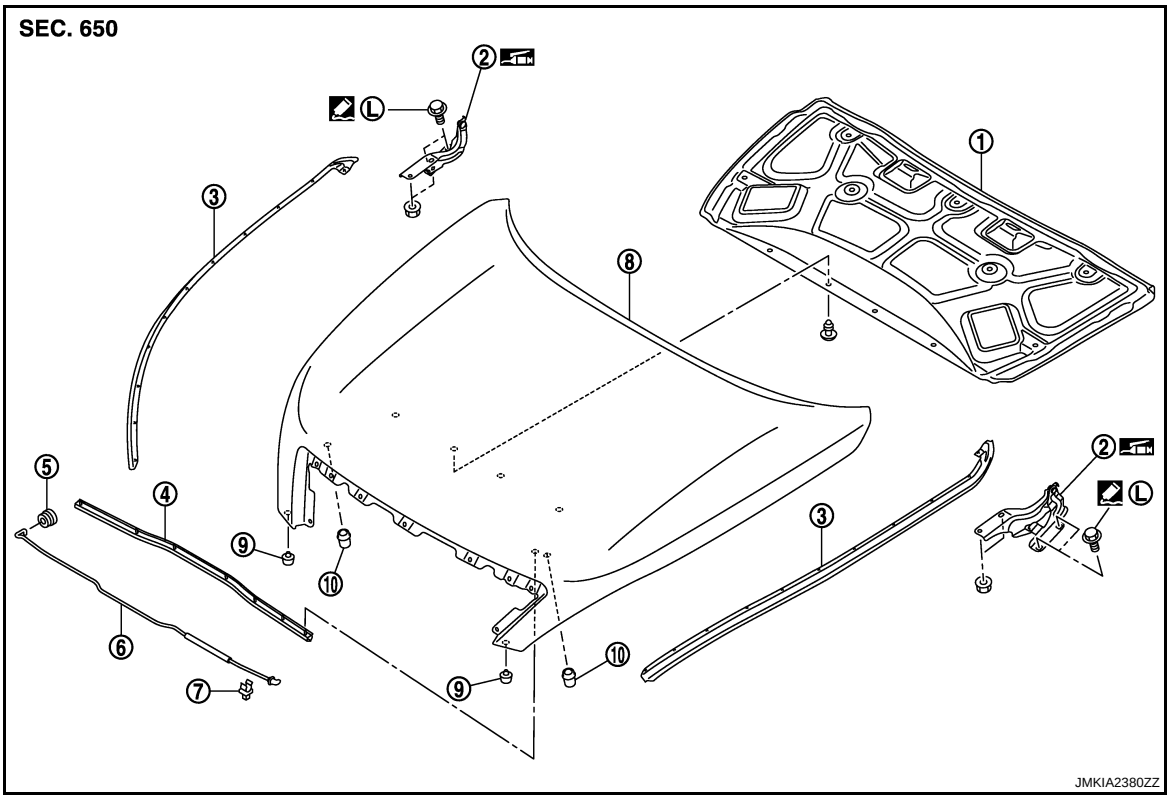

1. Hood insulator
2. Hood hinge (RH/LH)
3. Hood seal (front) (RH/LH)
4. Radiator core seal
5. Grommet
6. Hood support rod
7. Clamp
8. Hood assembly
9. Hood bumper rubber (lower) (RH/LH)
10. Hood bumper rubber (side) (RH/LH)

Refer to GI-4, "Components" for symbols in the figure.

ADJUSTMENT

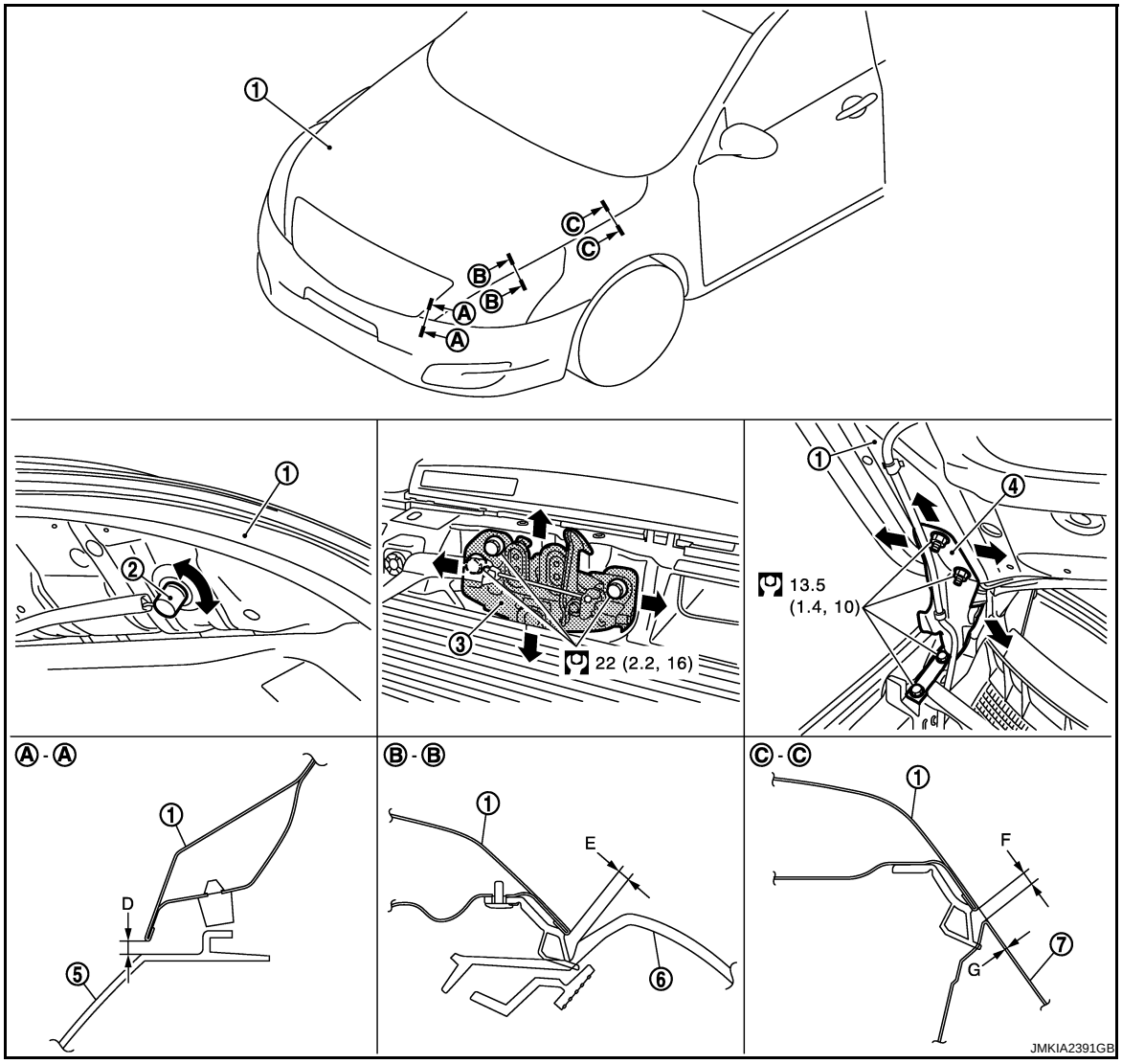

1. Hood assembly
2. Hood bumper rubber
3. Hood lock assembly
4. Hood hinge
5. Front bumper fascia
6. Front combination lamp
7. Front fender

Refer to GI-4, "Components" for symbols in the figure.

HOOD ASSEMBLY : Removal and Installation

INFOID:0000000003813384

CAUTION:
Operate with two workers, because of its heavy weight.

REMOVAL

1. Remove hood insulator.
2. Remove washer nozzle and washer tube. Refer to WW-102, "Removal and Installation".
3. Support hood assembly with a proper material to prevent it from falling.

   WARNING:
   Bodily injury may occur if no supporting rod is holding the hood open when removing the hood stay.
4. Remove hood hinge mounting nuts on the hood to remove the hood assembly.
5. Remove the following parts after removing the hood assembly.
   - Radiator core seal
   - Hood bumper rubber (lower, side)
   - Hood seal (front)

- Front grille: Refer to EXT-18, "Removal and Installation".

INSTALLATION

Install in the reverse order of removal.

CAUTION:

- **After installing, perform hood fitting adjustment. Refer to DLK-193, "HOOD ASSEMBLY : Adjustment".**
- **After installing, perform front washer nozzle and tube inspection and adjustment. Refer to WW-102, "Inspection and Adjustment".**

HOOD ASSEMBLY : Adjustment

INFOID:0000000003813385

Check the clearance and the surface height between hood and each part visually and by touching. (Fitting standard dimension in the table below should be satisfied.
If the clearance and the surface height are out of specification, adjust them according to the procedures shown below.

Unit: mm (in)

Portion				Standard	Difference (RH/LH, MAX)
Hood – Front bumper fascia	A – A	D	Clearance	3.7 – 8.3 (0.146 – 0.315)	2.0 (0.079)
Hood – Front combination lamp	B – B	E	Clearance	2.4 – 6.8 (0.094 – 0.268)	2.5 (0.098)
Hood – Front fender	C – C	F	Clearance	3.1 – 6.1 (0.122 – 0.240)	2.0 (0.079)
		G	Surface height	–1.5 – 1.5 (–0.059 – 0.059)	—

1. Remove hood lock and adjust the height by rotating hood bumper rubber (side, lower) until hood becomes 1 to1.5 mm (0.039 to 0.059 in) lower than fender.
2. Temporarily tighten hood lock assembly, and position by engaging it with hood striker. Check hood lock and striker for looseness and adjust the clearance and evenness with striker to satisfy the specification.
3. Adjust A and B shown in the figure to the following value with hood's own weight by dropping it from approximately 200 mm (7.874 in) height or by pressing hood lightly [approximately 29 N (3.0 kg, 6.5 lb)].

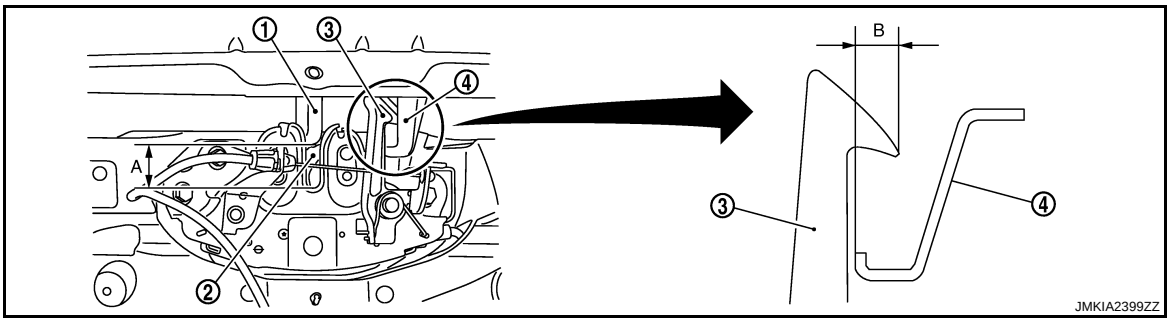

1. Hood striker
2. Primary latch
3. Secondary striker
4. Secondary latch

A : 20.0 mm (0.787 in)
B : 6.8 mm (0.268 in)

4. After adjustment, tighten lock bolts to the specified torque.

HOOD HINGE

HOOD HINGE : Exploded View

INFOID:0000000003819555

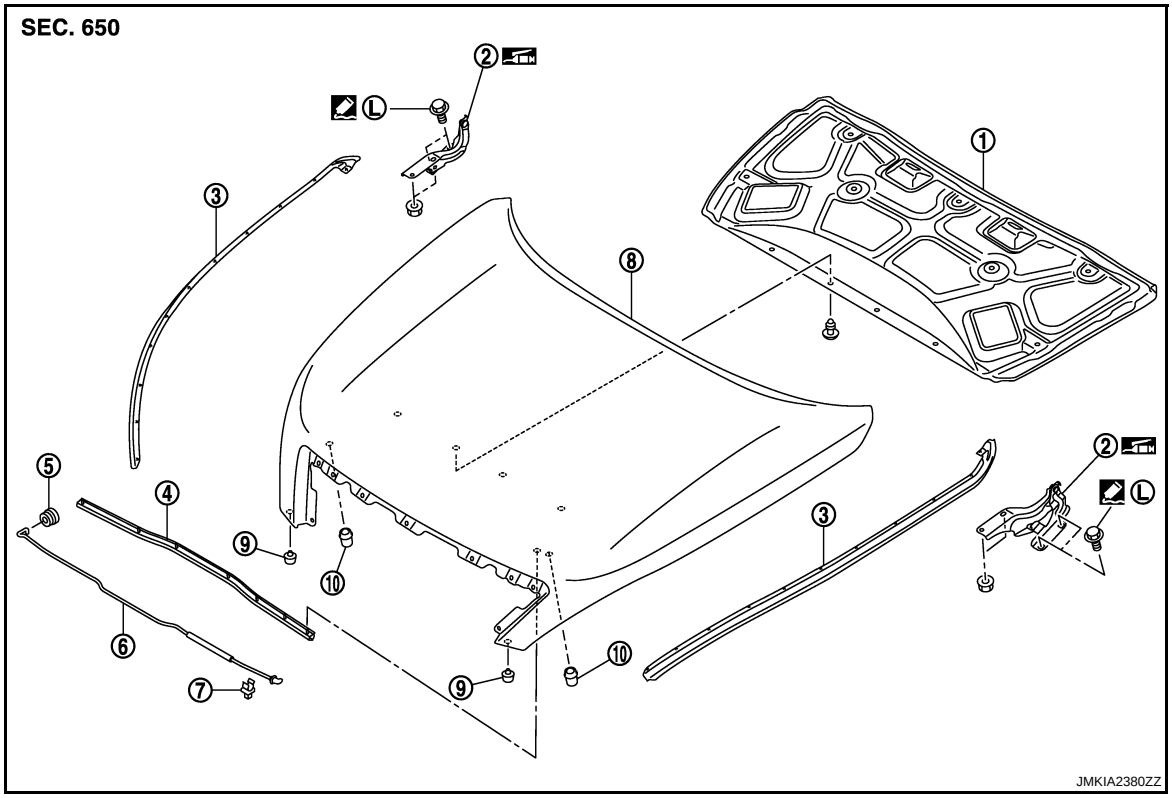

1.	Hood insulator	2.	Hood hinge (RH/LH)	3.	Hood seal (front) (RH/LH)
4.	Radiator core seal	5.	Grommet	6.	Hood support rod
7.	Clamp	8.	Hood assembly	9.	Hood bumper rubber (lower) (RH/LH)
10.	Hood bumper rubber (side) (RH/LH)				

Refer to GI-4, "Components" for symbols in the figure.

HOOD HINGE : Removal and Installation

INFOID:0000000003813387

REMOVAL

1. Remove hood assembly. Refer to DLK-192, "HOOD ASSEMBLY : Removal and Installation".
2. Remove front fender. Refer to DLK-199, "Removal and Installation".
3. Remove hood hinge mounting bolts, and then remove hood hinge.

INSTALLATION

Install in the reverse order of removal.

CAUTION:

- **After installation, apply touch-up paint (the body color) onto the head of the hinge mounting bolts and nuts.**
- **After installation, perform hood fitting adjustment. Refer to DLK-193, "HOOD ASSEMBLY : Adjustment".**

HOOD SUPPORT ROD

HOOD SUPPORT ROD : Exploded View

INFOID:0000000003819556

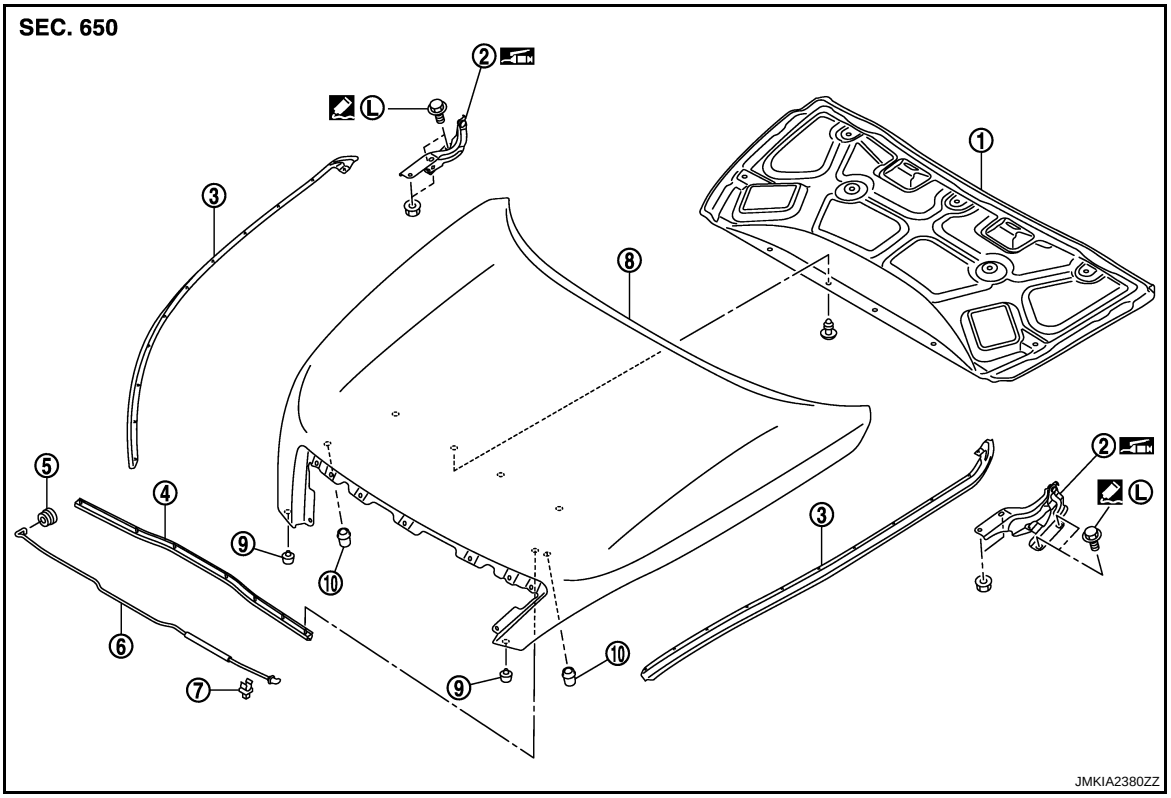

1.	Hood insulator	2.	Hood hinge (RH/LH)	3.	Hood seal (front) (RH/LH)
4.	Radiator core seal	5.	Grommet	6.	Hood support rod
7.	Clamp	8.	Hood assembly	9.	Hood bumper rubber (lower) (RH/LH)
10.	Hood bumper rubber (side) (RH/LH)				

Refer to GI-4, "Components" for symbols in the figure.

HOOD SUPPORT ROD : Removal and Installation

INFOID:0000000003813389

REMOVAL

1. Support hood assembly with a proper material to prevent it from falling.

   WARNING:
   Bodily injury may occur if no supporting rod is holding the hood open when removing the hood support rod.
2. Pull hood support rod from grommet and remove.

INSTALLATION

Install in the reverse order of removal.

RADIATOR CORE SUPPORT

Exploded View

INFOID:0000000003795070

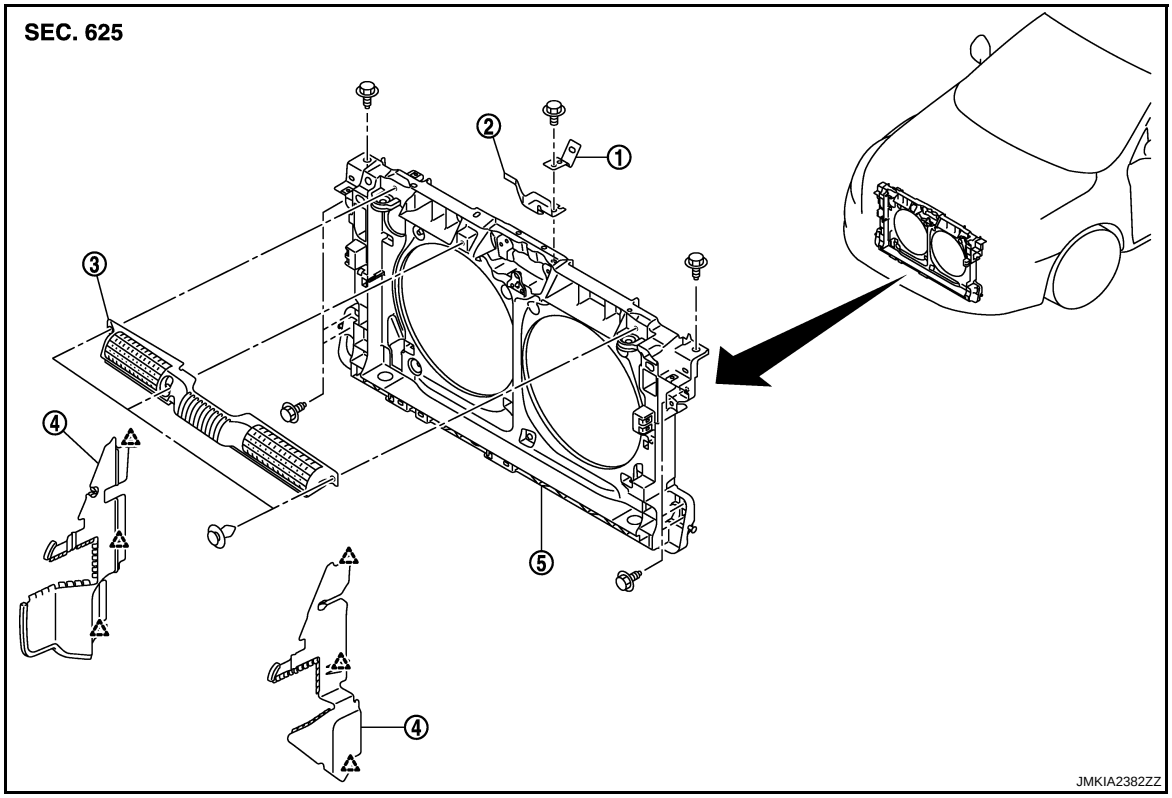

1. Radiator upper hose bracket
2. Hood switch bracket
3. Air duct cover
4. Air guide (RH/LH)
5. Radiator core support

: Pawl

Removal and Installation

INFOID:0000000003795071

REMOVAL

1. Use refrigerant collecting equipment to discharge the refrigerant. Refer to HA-24, "Collection and Charge".
2. Remove front under cover. Refer to EXT-28, "Removal and Installation".
3. Drain engine coolant from radiator. Refer to CO-8, "Draining".
4. Remove front bumper fascia, energy absorber and bumper reinforcement. Refer to EXT-12, "Removal and Installation".
5. Remove mounting clips and remove air duct cover.
6. Remove hood lock opener and hood lock. Refer to DLK-220, "Removal and Installation".
7. Disconnect connector of horn (HIGH/LOW), and then remove horn (HIGH/LOW). Refer to HRN-6, "Removal and Installation".
8. Disconnect connector of gas sensor, and then remove gas sensor (with intelligent air conditioner system). Refer to VTL-82, "WITH INTELLIGENT AIR CONDITIONER SYSTEM : Removal and Installation".
9. Remove bumper retainer assembly. Refer to EXT-12, "Removal and Installation".
10. Remove air guide (RH/LH).
11. Remove front combination lamp (RH/LH). Refer to EXL-181, "Removal and Installation" (XENON TYPE) or EXL-343, "Removal and Installation" (HALOGEN TYPE).
12. Disconnect connector of ambient sensor. Refer to VTL-24, "Removal and Installation" (WITHOUT 7 INCH DISPLAY) or VTL-81, "Removal and Installation" (WITH 7 INCH DISPLAY).

13. Disconnect connector of refrigerant pressure sensor. Refer to HA-50, "Exploded View".
14. Remove mounting bolt, and then remove engine coolant reservoir tank. Refer to CO-13, "Exploded View".
15. Remove mounting bolts, and then disconnect condenser pipe assembly. Refer to HA-48, "Exploded View".
16. Remove condenser. Refer to HA-46, "Removal and Installation".
17. Remove mounting nut of radiator upper hose from radiator core support, and then remove radiator upper hose and hood switch bracket. Refer to CO-25, "Exploded View".
18. Disconnect radiator upper hose from radiator pipe (upper). Refer to CO-25, "Exploded View".
19. Disconnect radiator lower hose (3). Refer to CO-25, "Exploded View".
20. Disconnect CVT fluid cooler hose on radiator side. Refer to TM-165, "Exploded View" (CVT: RE0F09B) or TM-329, "Exploded View" (CVT: RE0F10A).
21. Remove power steering oil cooler pipe from radiator core support at point shown by arrows in the figure.

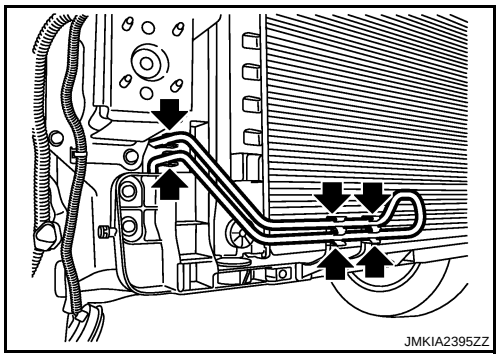

22. Disconnect connectors of the following parts.
    - Cooling fan (RH/LH). Refer to CO-16, "Exploded View".
    - Crash zone sensor. Refer to SR-18, "Removal and Installation".
23. Remove radiator upper clip. Refer to CO-13, "Exploded View".
24. Remove all harness clips from radiator core support.
    CAUTION:
    Never damage radiator.

    : harness clip

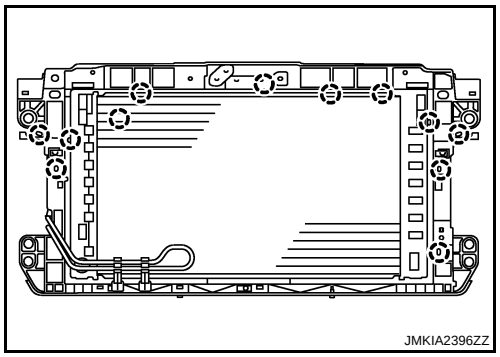

25. Support hood assembly with a proper material to prevent it from falling.
    WARNING:
    Bodily injury may occur if no supporting rod is holding the hood open when removing the hood stay.
26. Remove hood support rod. Refer to DLK-195, "HOOD SUPPORT ROD : Removal and Installation".
27. Remove mounting bolts, and then remove radiator core support.
    CAUTION:
    - **Operate with two workers, because of its heavy weight.**
    - **Never damage power steering oil cooler pipe.**
28. Remove the following parts after removing radiator core support.
    - Radiator lower hose, radiator upper hose, radiator pipe. Refer to CO-25, "Exploded View".
    - Radiator. Refer to CO-13, "Exploded View".
    - Cooling fan (RH/LH). Refer to CO-16, "Exploded View".
    - Crash zone sensor. Refer to SR-18, "Exploded View".
    - Power steering oil cooler pipe clip. Refer to ST-34, "Exploded View".

INSTALLATION

Install in the reverse order of removal.

CAUTION:

- **After installation, inspection and replenish the following.**
- **Engine coolant. Refer to CO-8, "Inspection", CO-9, "Refilling".**
- **CVT fluid. Refer to TM-142, "Inspection", TM-143, "Changing" (CVT: RE0F09B) or TM-304, "Inspection", TM-305, "Changing" (CVT: RE0F10A).**
- **After installation, adjust the following parts.**
- **Front combination lamp. EXL-174, "Aiming Adjustment Procedure (Low Beam)", EXL-175, "Aiming Adjustment Procedure (High Beam)" (XENON TYPE) or EXL-337, "Aiming Adjustment Procedure (Low Beam)", EXL-338, "Aiming Adjustment Procedure (High Beam)" (HALOGEN TYPE).**

FRONT FENDER

Exploded View

INFOID:0000000003813392

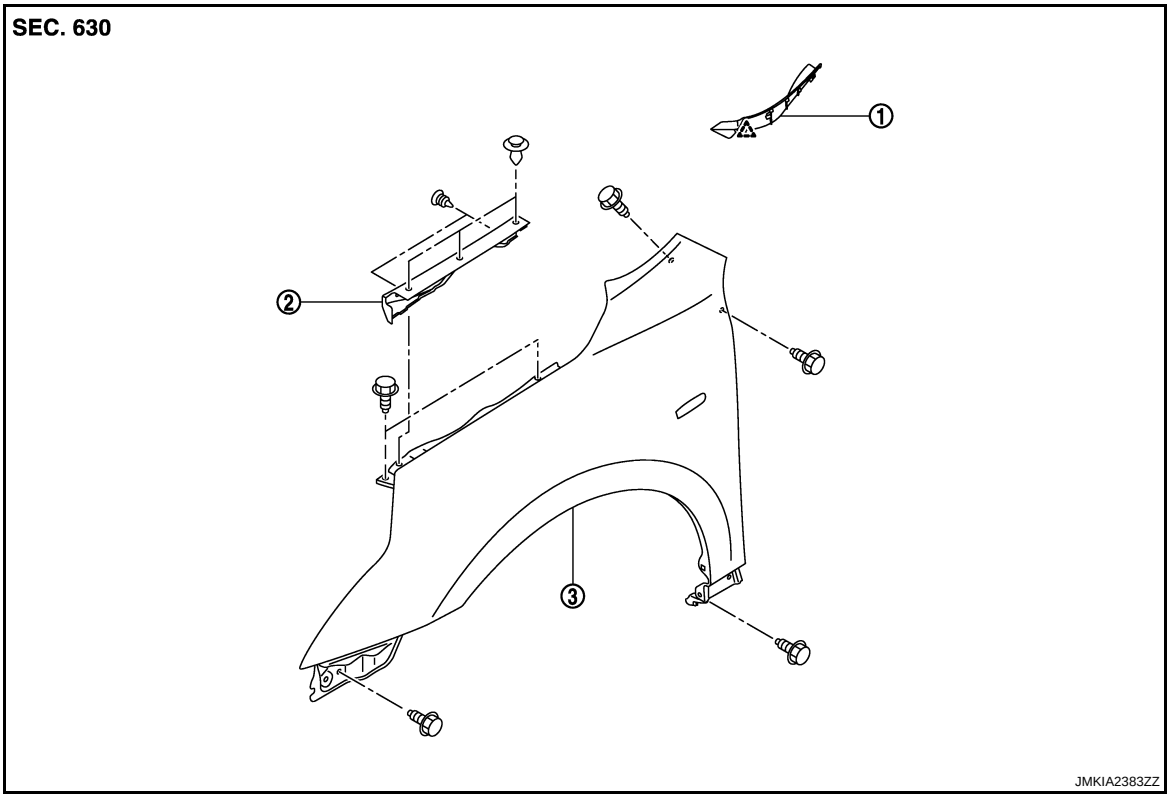

1. Front fender cover
2. Hood seal assembly (side)
3. Front fender

: Pawl

Removal and Installation

INFOID:0000000003813393

CAUTION:
Use a shop cloth to protect the body from being damaged during removal and installation.

REMOVAL

1. Remove clips (A) of hood seal assembly (side) (1).

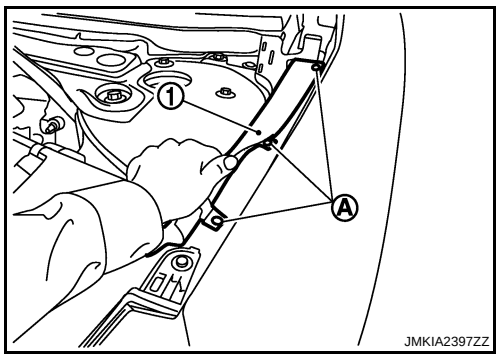

2. Remove fender protector. Refer to EXT-22, "FENDER PROTECTOR : Removal and Installation".
3. Remove front bumper fascia. Refer to EXT-12, "Removal and Installation".
4. Remove front combination lamp. Refer to EXL-181, "Removal and Installation" (XENON TYPE) or EXL-343, "Removal and Installation" (HALOGEN TYPE).
5. Remove front fender cover.
6. Remove center mud guard. Refer to EXT-26, "Removal and Installation".

7. Remove mounting bolts and remove front fender.

CAUTION:

A viscous urethane foam is installed on the back surface of front fender. When removing the front fender, peel of the urethane foam bit at a time, and carefully to remove it.

INSTALLATION

Install in the reverse order of removal.

CAUTION:

- **After installation, check front fender adjustment. Refer to DLK-193, "HOOD ASSEMBLY : Adjustment" and DLK-203, "DOOR ASSEMBLY : Adjustment".**
- **After installation, apply the touch-up paint (the body color) onto the head of front fender mounting bolts.**
- **Adjust the following part.**
- **Front combination lamp: Refer to EXL-174, "Aiming Adjustment Procedure (Low Beam)", EXL-175, "Aiming Adjustment Procedure (High Beam)" (XENON TYPE) or EXL-337, "Aiming Adjustment Procedure (Low Beam)", EXL-338, "Aiming Adjustment Procedure (High Beam)" (HALOGEN TYPE).**

FRONT DOOR

DOOR ASSEMBLY

DOOR ASSEMBLY : Exploded View

INFOID:0000000003813394

REMOVAL

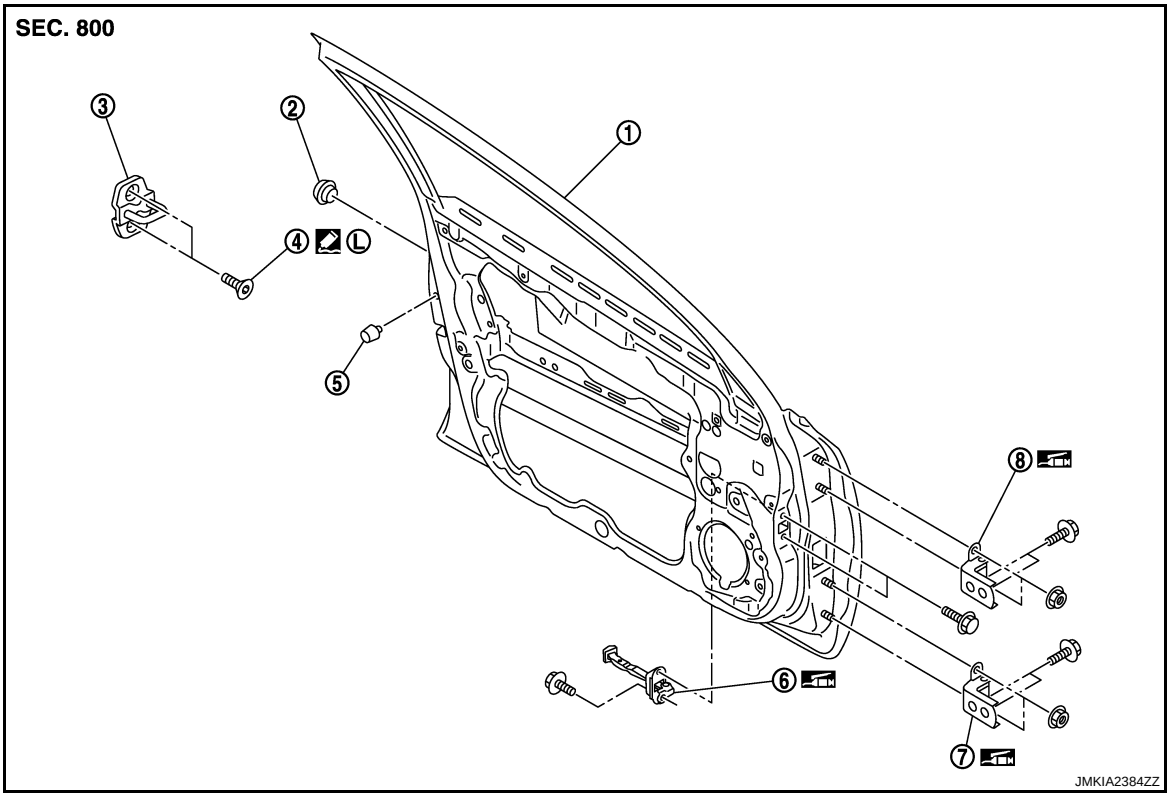

1. Front door panel	2. Grommet	3. Door striker
4. TORX bolt	5. Bumper rubber	6. Door check link
7. Door hinge (lower)	8. Door hinge (upper)	

Refer to GI-4, "Components" for symbols in the figure.

ADJUSTMENT

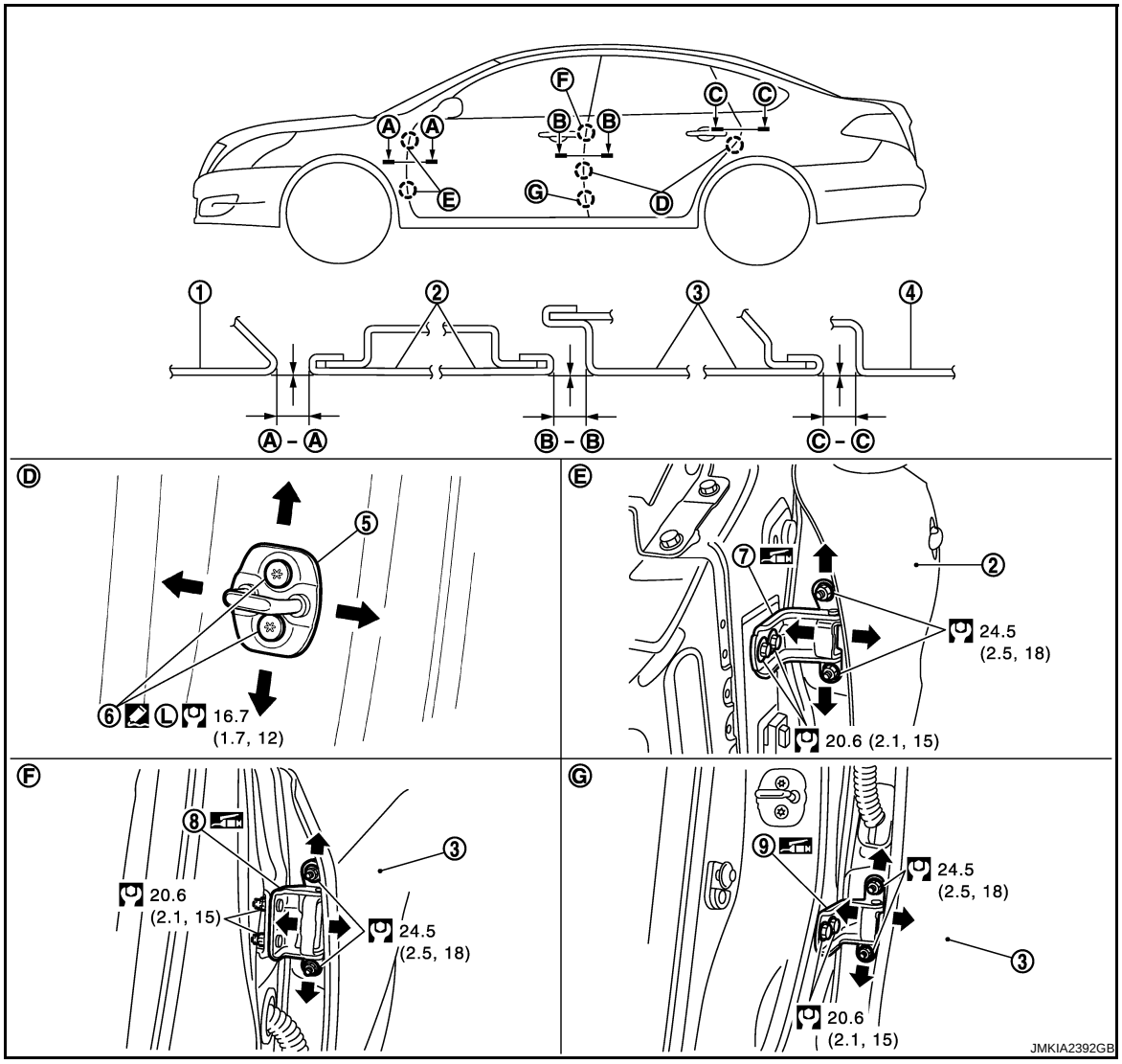

1.	Front fender	2.	Front door	3.	Rear door
4.	Body side outer	5.	Door striker	6.	TORX bolt
7.	Front door hinge	8.	Rear door hinge (upper)	9.	Rear door hinge (lower)

Refer to GI-4, "Components" for symbols in the figure.

DOOR ASSEMBLY : Removal and Installation

INFOID:0000000003813395

CAUTION:
- **Perform work with 2 workers, because of its heavy weight.**
- **When removing and installing front door assembly, support door with a jack and cloth to protect door and body.**

REMOVAL

1. Remove mounting bolts of door check link on the vehicle.
2. Remove front door harness grommet, and then pull out the harness from the vehicle.
3. Disconnect front door harness connector.
4. Remove door hinge mounting nuts (door side), and then remove front door assembly.

INSTALLATION

Install in the reverse order of removal.

CAUTION:
- **Check front door open/close, lock/unlock operation after installation.**

- **Check door hinge rotating part for poor lubrication. If necessary, apply body grease.**
- **After installation, perform the fitting adjustment. Refer to DLK-203, "DOOR ASSEMBLY : Adjustment".**
- **After installation, apply touch-up paint (the body color) onto the head of door hinge mounting nuts.**

DOOR ASSEMBLY : Adjustment

INFOID:0000000003813396

Check the clearance and surface height between front door and each part by visually and touching.
If the clearance and the surface height are out of specification, adjust them according to the procedures shown below.

Unit: mm (in)

Portion		Clearance	Surface height
Front fender – Front door	A – A	2.6 – 4.6 (0.102 – 0.181)	–1.0 – 1.0 (–0.039 – 0.039)
Front door – Rear door	B – B	3.6 – 5.6 (0.142 – 0.220)	–1.0 – 1.0 (–0.039 – 0.039)

1. Remove front fender. Refer to DLK-199, "Removal and Installation".
2. Loosen door hinge mounting nuts on door side.
3. Adjust the surface height of front door according to the fitting standard dimension.
4. Temporarily tighten door hinge mounting nuts on door side.
5. Loosen door hinge mounting bolts on body side.
6. Raise front door at rear end to adjust clearance of the front door according to the fitting standard dimension.
7. After adjustment tighten bolts and nuts to the specified torque.
8. Install front fender. Refer to DLK-199, "Removal and Installation".

DOOR STRIKER ADJUSTMENT

Adjust door striker so that it becomes parallel with door lock insertion direction.

DOOR STRIKER

DOOR STRIKER : Exploded View

INFOID:0000000003819380

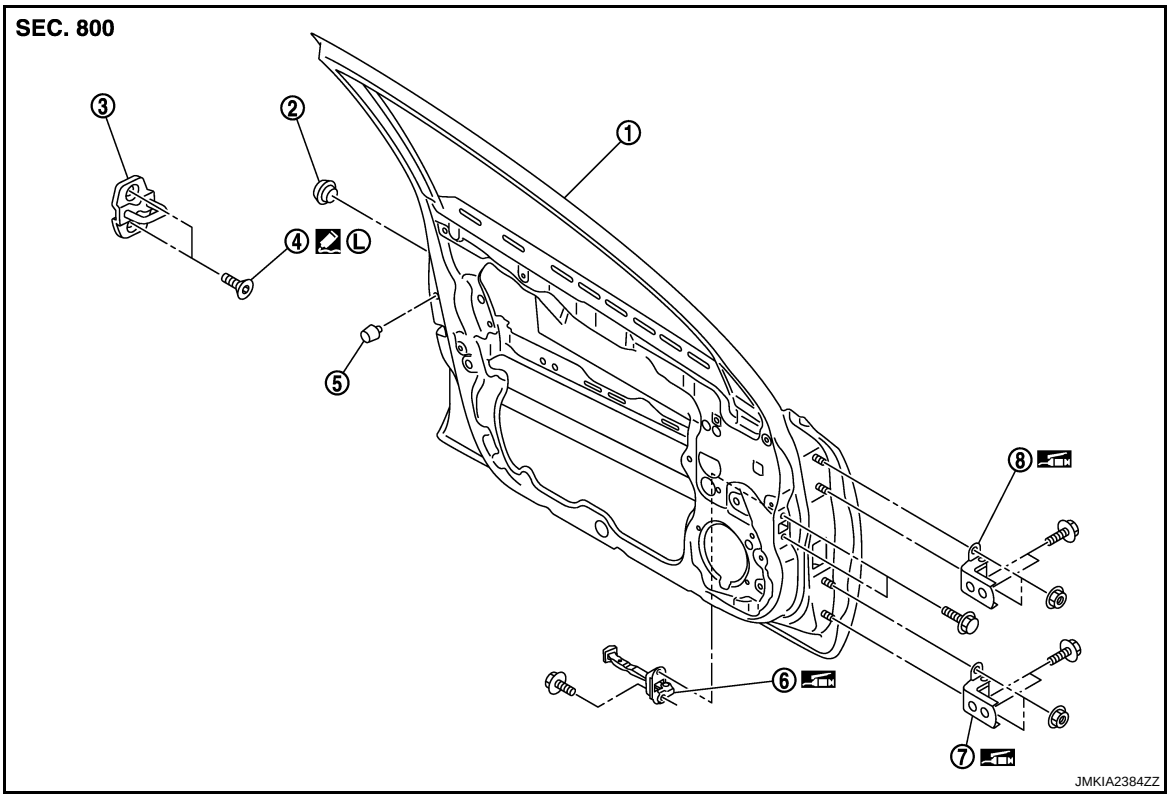

1. Front door panel
2. Grommet
3. Door striker
4. TORX bolt
5. Bumper rubber
6. Door check link
7. Door hinge (lower)
8. Door hinge (upper)

Refer to GI-4, "Components" for symbols in the figure.

DOOR STRIKER : Removal and Installation

INFOID:0000000003813398

REMOVAL

Remove TORX bolts, and then remove door striker.

INSTALLATION

Install in the reverse order of removal.

CAUTION:

- **Check front door open/close, lock/unlock operation after installation.**
- **After installation, perform the fitting adjustment. Refer to DLK-203, "DOOR ASSEMBLY : Adjustment".**

DOOR HINGE

DOOR HINGE : Exploded View

INFOID:0000000003819407

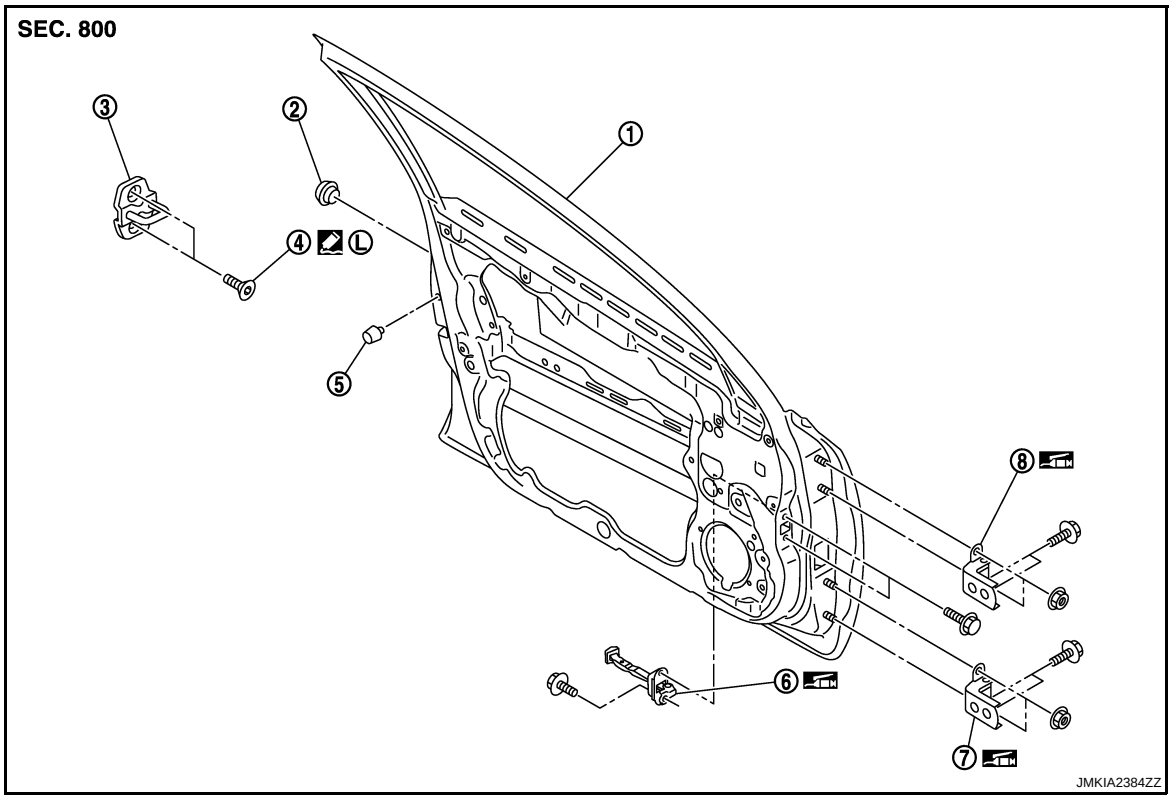

1. Front door panel
2. Grommet
3. Door striker
4. TORX bolt
5. Bumper rubber
6. Door check link
7. Door hinge (lower)
8. Door hinge (upper)

Refer to GI-4, "Components" for symbols in the figure.

DOOR HINGE : Removal and Installation

INFOID:0000000003813400

REMOVAL

1. Remove front fender. Refer to DLK-199, "Removal and Installation"
2. Remove front door assembly. Refer to DLK-202, "DOOR ASSEMBLY : Removal and Installation".

3. Remove front door hinge mounting bolts, and then remove front door hinge.

INSTALLATION

Install in the reverse order of removal.

CAUTION:

- **Check front door open/close, lock/unlock operation after installation.**
- **Check door hinge rotating part for poor lubrication. If necessary, apply body grease.**
- **After installation, perform the fitting adjustment. Refer to DLK-203, "DOOR ASSEMBLY : Adjustment".**
- **After installation, apply touch-up paint (the body color) onto the head of door hinge mounting nuts and bolts.**

DOOR CHECK LINK

DOOR CHECK LINK : Exploded View

INFOID:0000000003819408

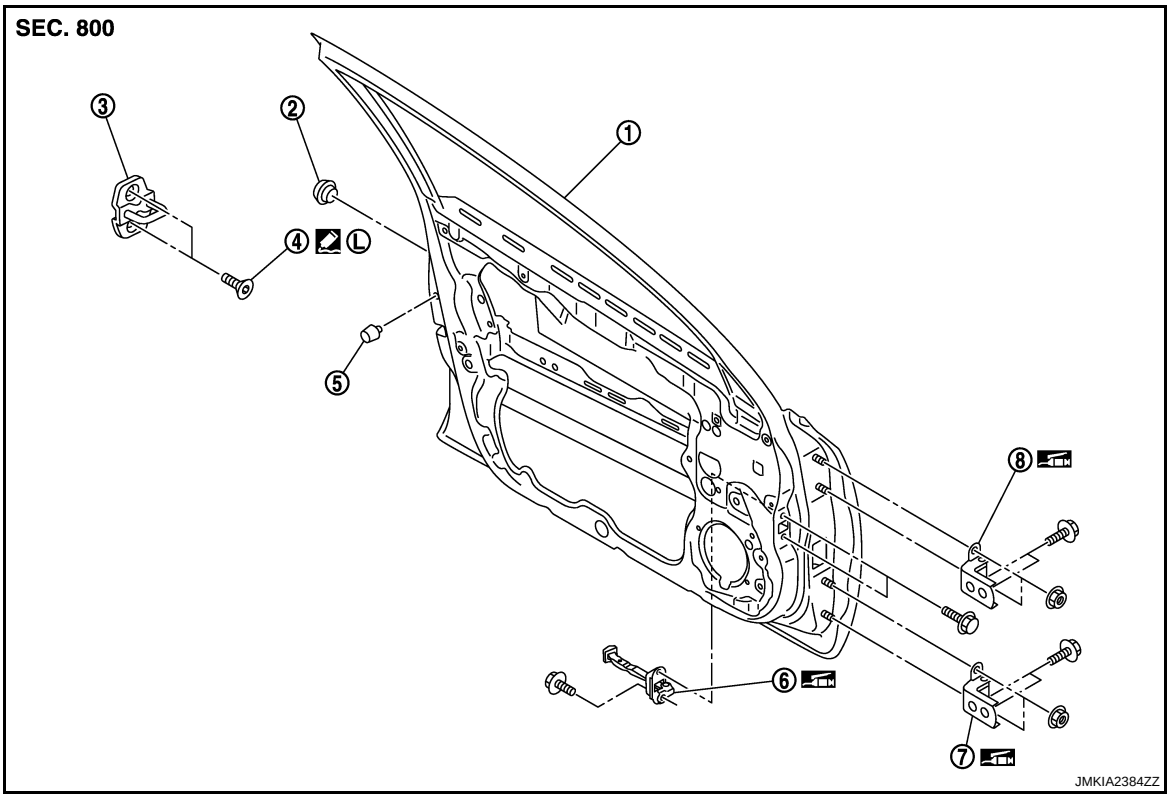

1. Front door panel
2. Grommet
3. Door striker
4. TORX bolt
5. Bumper rubber
6. Door check link
7. Door hinge (lower)
8. Door hinge (upper)

Refer to GI-4, "Components" for symbols in the figure.

DOOR CHECK LINK : Removal and Installation

INFOID:0000000003813402

REMOVAL

1. Remove front door finisher. Refer to INT-30, "DRIVER SIDE : Removal and Installation" (driver side) or INT-33, "PASSENGER SIDE : Removal and Installation" (passenger side).
2. Fully close the front door window.
3. Remove front door speaker.
4. Remove mounting bolts of door check link on the vehicle.
5. Remove mounting bolts of door check link on door panel.
6. Take door check link out from the hole of door panel.

INSTALLATION

Install in the reverse order of removal.

CAUTION:

Check front door open/close operation after installation.

REAR DOOR

DOOR ASSEMBLY

DOOR ASSEMBLY : Exploded View

INFOID:0000000003813403

REMOVAL

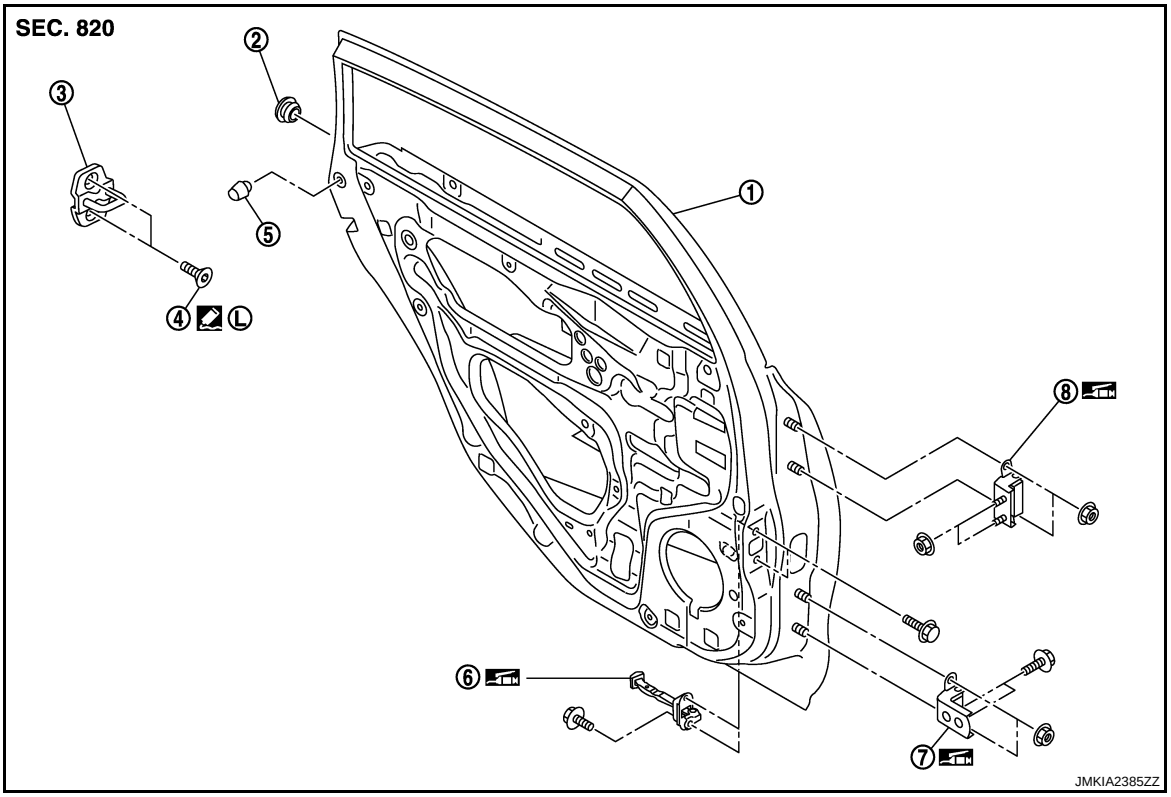

1. Rear door panel	2. Grommet	3. Door striker
4. TORX bolt	5. Bumper rubber	6. Door check link
7. Door hinge (lower)	8. Door hinge (upper)	

Refer to GI-4, "Components" for symbols in the figure.

ADJUSTMENT

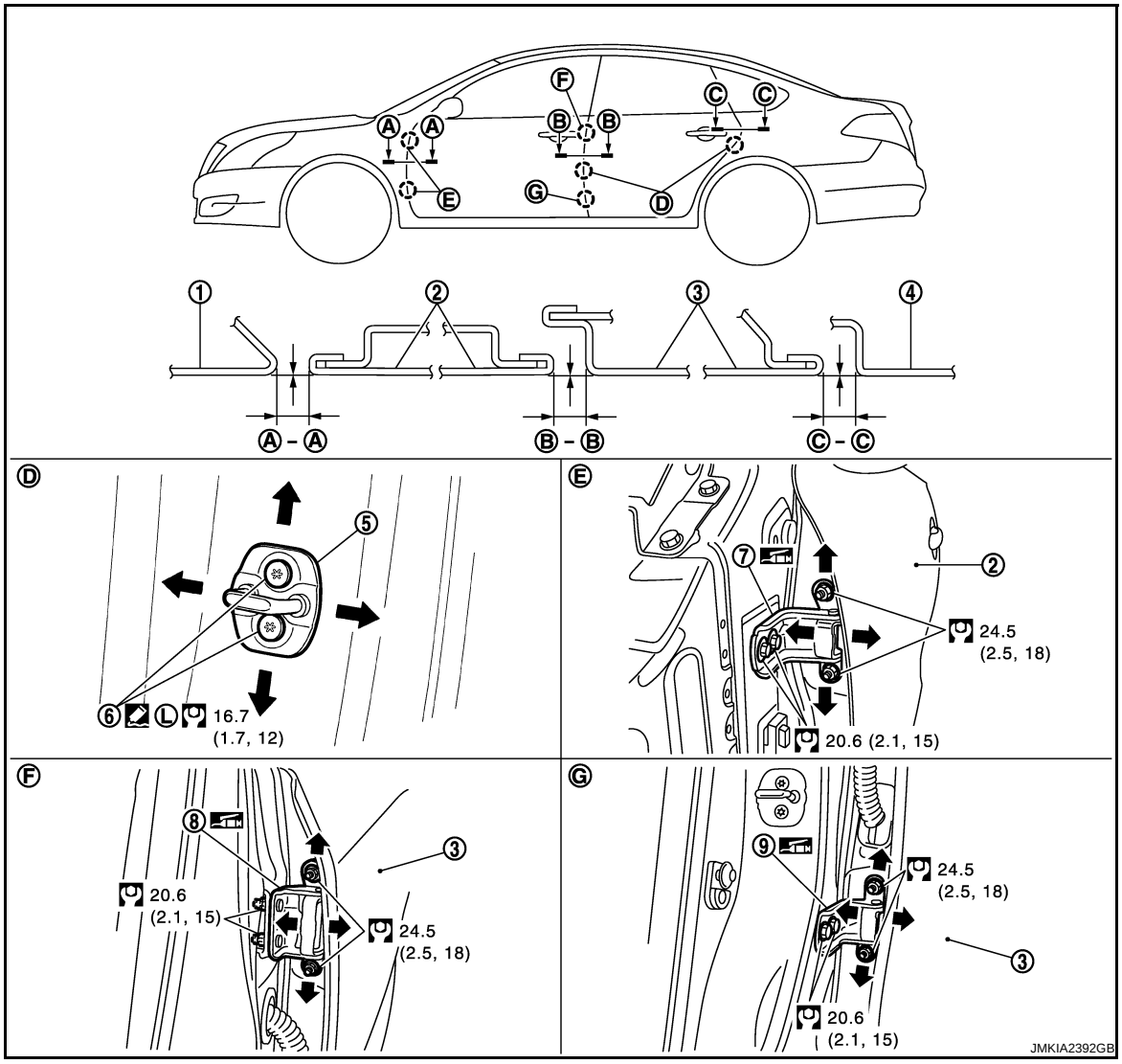

1.	Front fender	2.	Front door	3.	Rear door
4.	Body side outer	5.	Door striker	6.	TORX bolt
7.	Front door hinge	8.	Rear door hinge (upper)	9.	Rear door hinge (lower)

Refer to GI-4, "Components" for symbols in the figure.

DOOR ASSEMBLY : Removal and Installation

INFOID:0000000003813404

CAUTION:
- **Perform work with 2 workers, because of it's heavy weight.**
- **When removing and installing rear door assembly, support door with a jack and cloth to protect door and body.**

REMOVAL

1. Remove mounting bolts of door check link on the vehicle.
2. Remove rear door harness grommet, and then pull out door harness from the vehicle.
3. Disconnect rear door harness connector.
4. Remove door hinge mounting nuts (door side), and then remove rear door assembly.

INSTALLATION

Install in the reverse order of removal.

CAUTION:
- **Check rear door open/close, lock/unlock operation after installation.**

- **Check door hinge rotating part for poor lubrication. If necessary, apply body grease.**
- **After installation, perform the fitting adjustment. Refer to DLK-209, "DOOR ASSEMBLY : Adjustment".**
- **After installation, apply touch-up paint (the body color) onto the head of door hinge mounting nuts.**

DOOR ASSEMBLY : Adjustment

INFOID:0000000003813405

Check the clearance and surface height between rear door and each part by visually and touching.
If the clearance and surface height are out of specification, adjust them according to the procedures shown below.

Unit: mm (in)

Portion		Clearance	Surface height
Front door – Rear door	B – B	3.6 – 5.6 (0.142 – 0.220)	-1.0 – 1.0 (-0.039 – 0.039)
Rear door – Body side outer	C – C	2.6 – 4.6 (0.102 – 0.181)	-1.0 – 1.0 (-0.039 – 0.039)

1. Remove center pillar lower garnish. Refer to INT-39, "Removal and Installation".
2. Loosen door hinge mounting nuts on door side.
3. Adjust the surface height of rear door according to the fitting standard dimension.
4. Temporarily tighten door hinge mounting nuts on door side.
5. Loosen door hinge mounting nuts and bolts on body side.
6. Raise rear door at rear end to adjust clearance of the rear door according to the fitting standard dimension.
7. After adjustment, tighten bolts and nuts to the specified torque.
8. Install center pillar lower garnish. Refer to INT-39, "Removal and Installation".

DOOR STRIKER ADJUSTMENT

Adjust door striker so that it becomes parallel with door lock insertion direction.

DOOR STRIKER

DOOR STRIKER : Exploded View

INFOID:0000000003819605

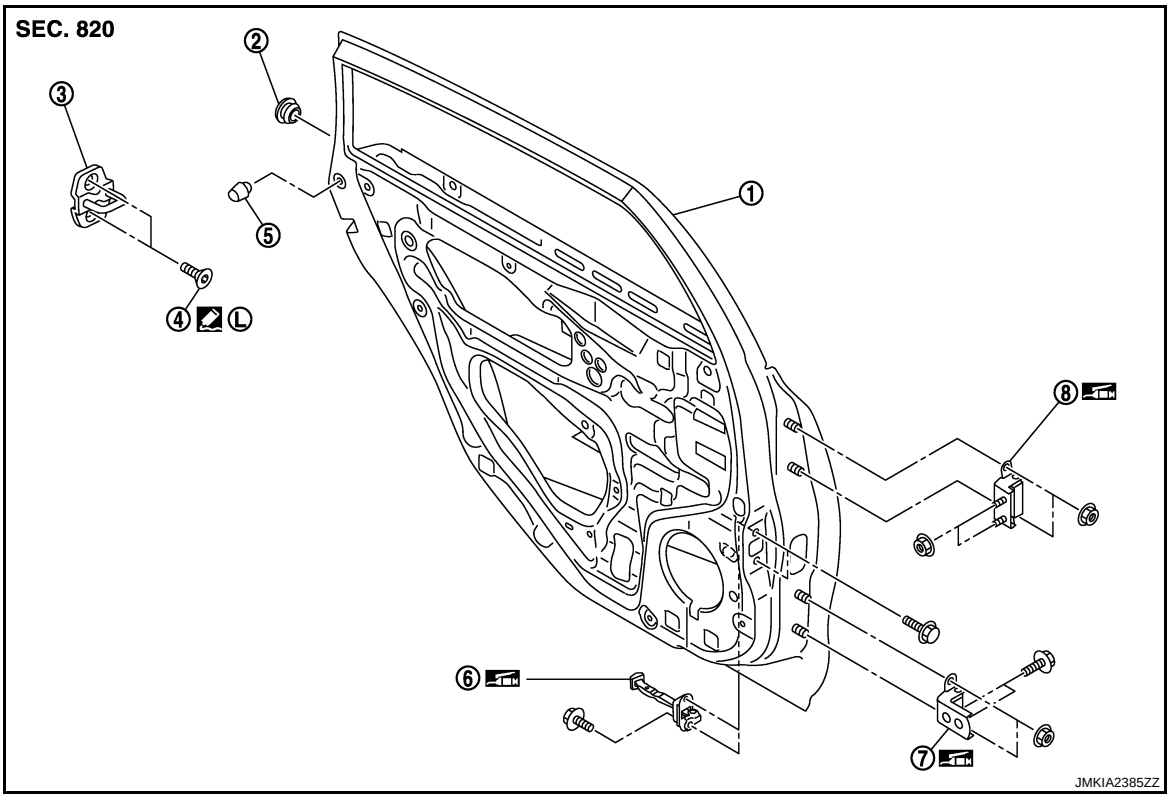

1. Rear door panel
2. Grommet
3. Door striker
4. TORX bolt
5. Bumper rubber
6. Door check link
7. Door hinge (lower)
8. Door hinge (upper)

Refer to GI-4, "Components" for symbols in the figure.

DOOR STRIKER : Removal and Installation

INFOID:0000000003813407

REMOVAL

Remove TORX bolts, and then remove door striker.

INSTALLATION

Install in the reverse order of removal.

CAUTION:

- **Check rear door open/close, lock/unlock operation after installation.**
- **After installation, perform the fitting adjustment. Refer to DLK-209, "DOOR ASSEMBLY : Adjustment".**

DOOR HINGE

DOOR HINGE : Exploded View

INFOID:0000000003819608

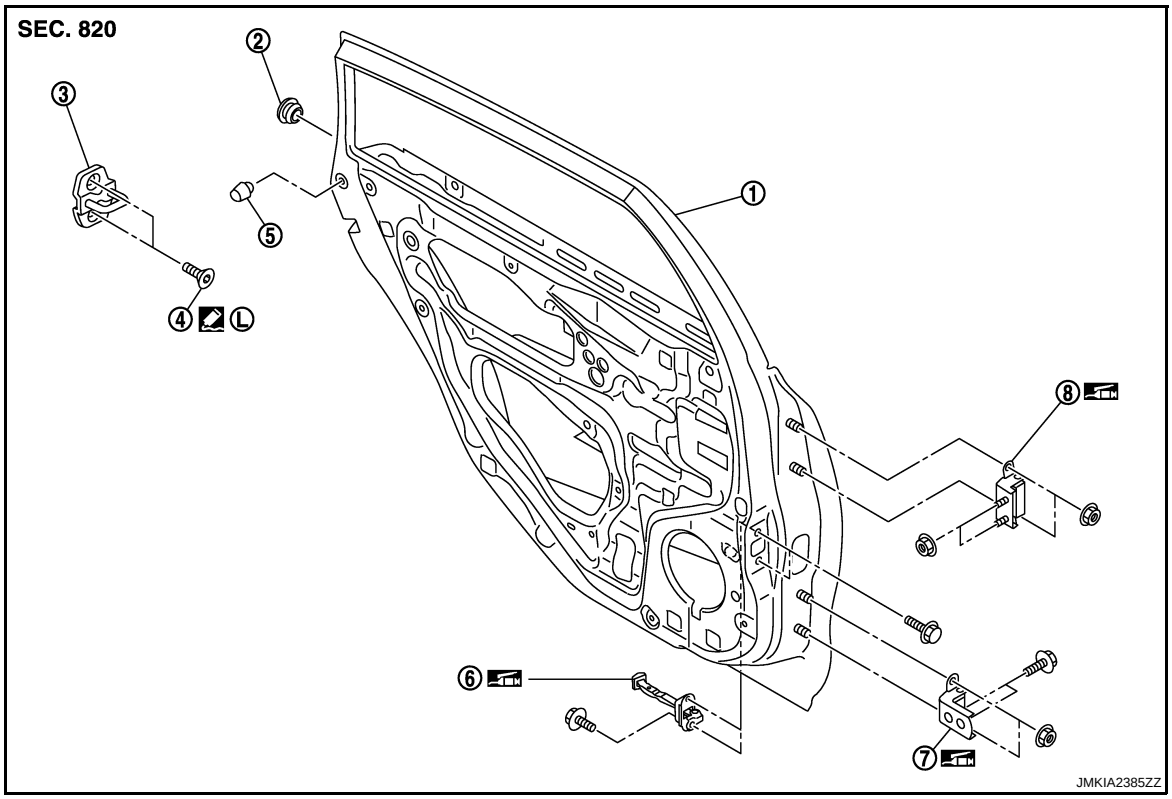

1. Rear door panel
2. Grommet
3. Door striker
4. TORX bolt
5. Bumper rubber
6. Door check link
7. Door hinge (lower)
8. Door hinge (upper)

Refer to GI-4, "Components" for symbols in the figure.

DOOR HINGE : Removal and Installation

INFOID:0000000003813409

REMOVAL

1. Remove center pillar lower garnish. Refer to INT-39, "Removal and Installation".
2. Remove rear door assembly. Refer to DLK-208, "DOOR ASSEMBLY : Removal and Installation".

3. Remove rear door hinge mounting bolts and nuts (body side), and then remove door hinge.

INSTALLATION

Install in the reverse order of removal.

CAUTION:

- **Check rear door open/close, lock/unlock operation after installation.**
- **Check door hinge rotating part for poor lubrication. If necessary, apply body grease.**
- **After installation, rear door assembly, perform the fitting adjustment. Refer to DLK-209, "DOOR ASSEMBLY : Adjustment".**
- **After installing, apply the touch-up paint (the body color) onto the head of door hinge mounting nuts.**

DOOR CHECK LINK

DOOR CHECK LINK : Exploded View

INFOID:0000000003819609

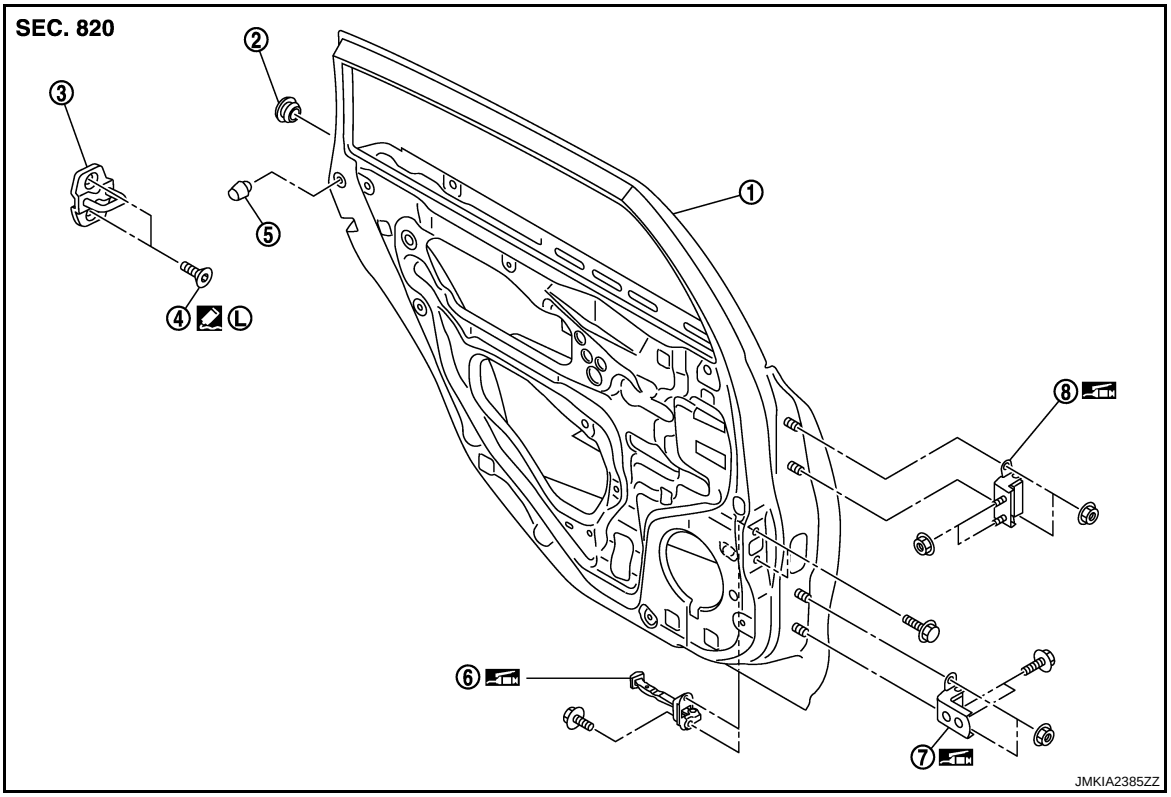

1. Rear door panel	2. Grommet	3. Door striker
4. TORX bolt	5. Bumper rubber	6. Door check link
7. Door hinge (lower)	8. Door hinge (upper)	

Refer to GI-4, "Components" for symbols in the figure.

DOOR CHECK LINK : Removal and Installation

INFOID:0000000003813411

REMOVAL

1. Remove rear door finisher. Refer to INT-36, "Removal and Installation".
2. Fully close the rear door window.
3. Remove rear door speaker.
4. Remove mounting bolts of the door link on the vehicle.
5. Remove mounting bolts of the door link on door panel.
6. Take door check link out from the hole of door panel.

INSTALLATION

Install in the reverse order of removal.

CAUTION:

Check rear door open/close operation after installation.

TRUNK LID

TRUNK LID ASSEMBLY

TRUNK LID ASSEMBLY : Exploded View

INFOID:0000000003813412

REMOVAL

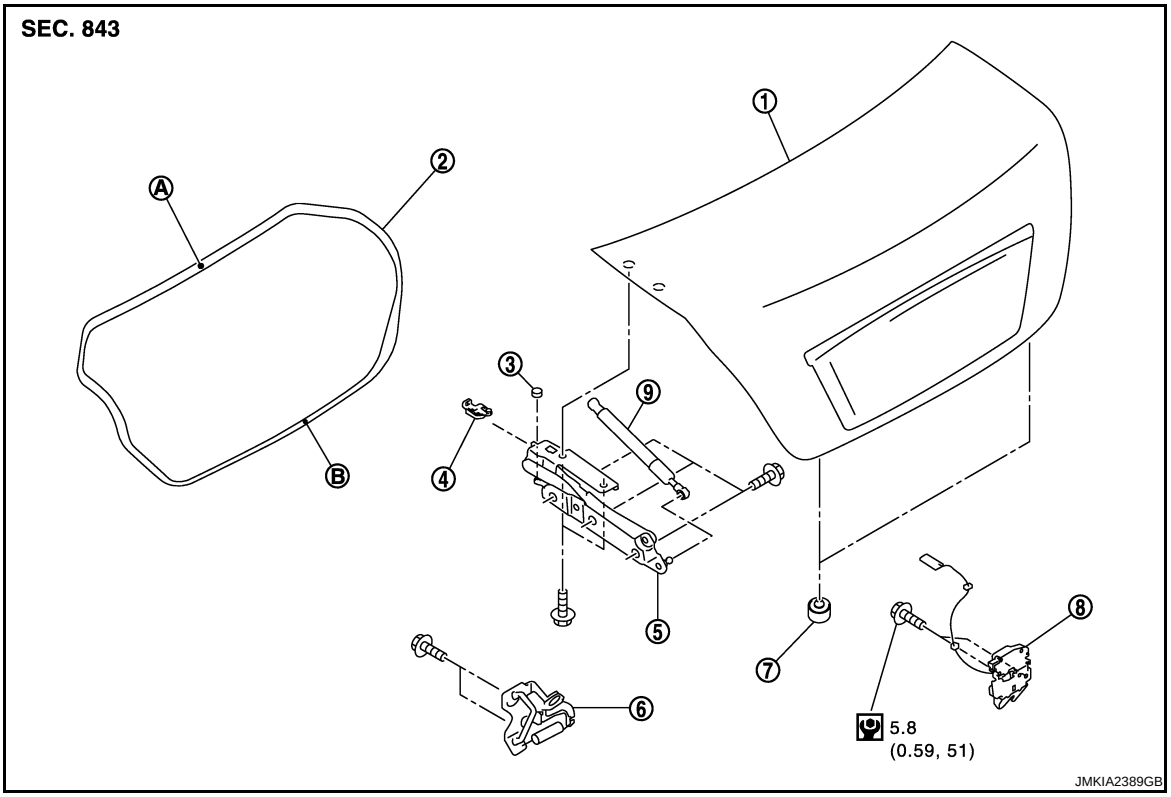

1.	Trunk lid	2.	Trunk lid weather-strip	3.	Cap
4.	Stopper	5.	Trunk lid hinge	6.	Trunk lid striker
7.	Bumper rubber	8.	Trunk lid lock assembly	9.	Trunk lid stay
A	: Center mark (upper)	B.	: Center mark (lower)		

Refer to GI-4, "Components" for symbols in the figure.

ADJUSTMENT

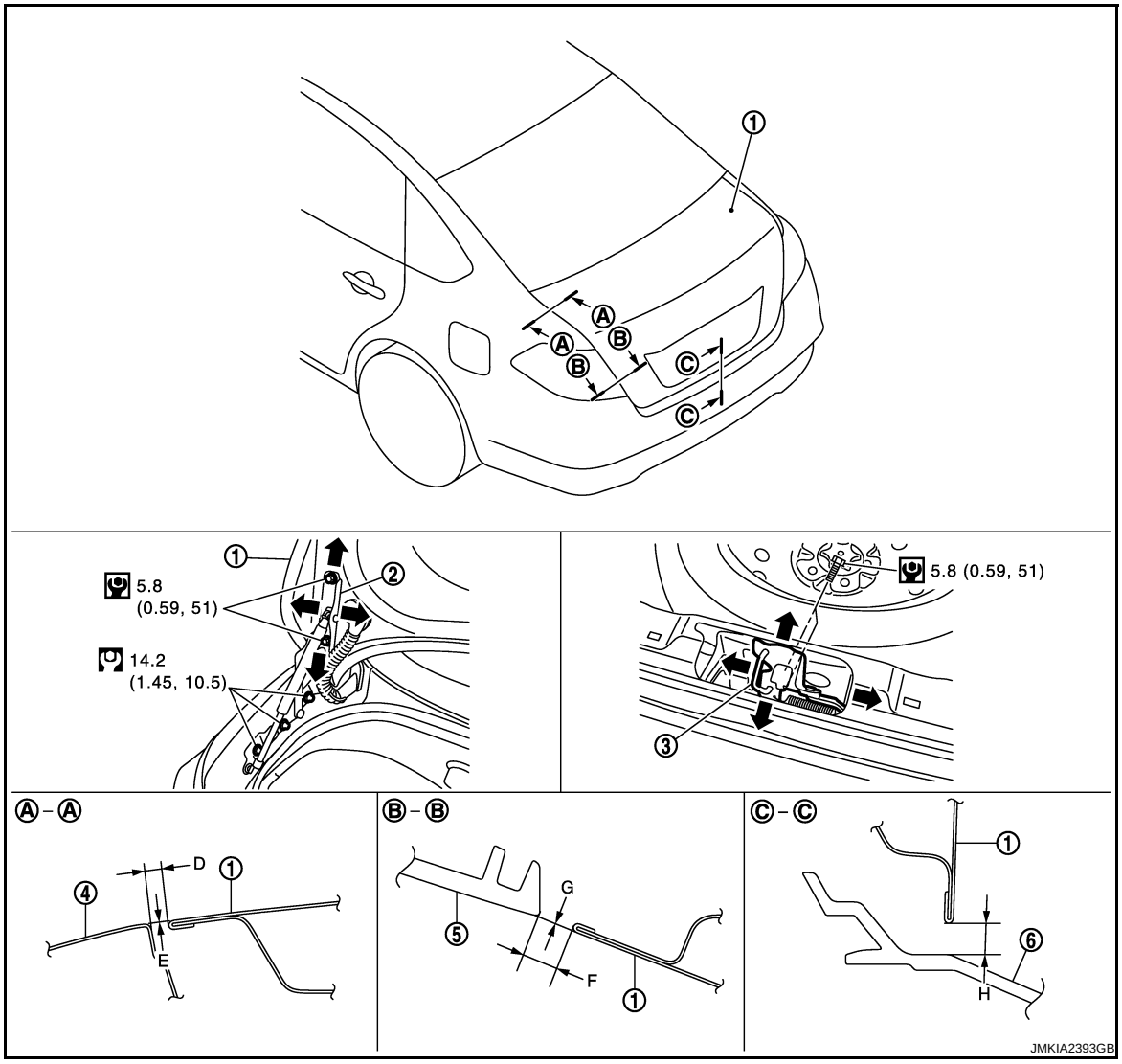

1. Trunk lid assembly
2. Trunk lid hinge
3. Trunk lid striker
4. Body side outer
5. Rear combination lamp
6. Rear bumper fascia

Refer to GI-4, "Components" for symbols in the figure.

TRUNK LID ASSEMBLY : Removal and Installation

INFOID:0000000003813413

CAUTION:
Operate with two workers, because of its heavy weight.

REMOVAL

1. Remove the trunk lid finisher inner. Refer to INT-59, "Removal and Installation"
2. Disconnect the connectors in the trunk lid, and remove the harness clamps to pull the harness out of the trunk lid.
3. Remove trunk lid stay at trunk lid side. Refer to DLK-218, "TRUNK LID STAY : Removal and Installation".
4. Remove the trunk lid hinge mounting bolts on trunk lid side and remove the trunk lid assembly.

INSTALLATION

Install in the reverse order of removal.

CAUTION:
- **After installing, apply touch-up paint (the body color) onto the head of the hinge mounting bolts.**
- **Check trunk lid open/close, lock/unlock operation after installation.**
- **After installation, perform fitting adjustment. Refer to DLK-215, "TRUNK LID ASSEMBLY : Adjustment".**

TRUNK LID ASSEMBLY : Adjustment

INFOID:0000000003813414

Check the clearance and surface height between trunk lid and each part by visually and touching.
If the clearance and surface height are out of specification, adjust them according to the procedures shown below.

Unit: mm (in)

Portion				Standard	Difference (RH/LH, MAX)
Trunk lid – Body side outer	A – A	D	Clearance	2.5 – 4.5 (0.098 – 0.177)	1.0 (0.039)
		E	Surface height	–1.5 – 0.5 (–0.059 – 0.020)	1.4 (0.055)
Trunk lid – Rear combination lamp	B – B	F	Clearance	2.9 – 6.5 (0.114 – 0.256)	2.0 (0.079)
		G	Surface height	–2.3 – 1.3 (–0.091 – 0.051)	2.0 (0.079)
Trunk lid – Rear bumper fascia	C – C	H	Clearance	5.0 – 9.0 (0.197 – 0.354)	—

1. Loosen trunk lid hinge mounting bolts (trunk lid side).
2. Remove trunk rear finisher. Refer to INT-57, "Removal and Installation".
3. Loosen trunk lid striker mounting bolts.
4. Lift up trunk lid approximately 100 – 150 mm (3.937 – 5.906 in) height then close it lightly and check that it is engaged firmly with trunk lid closed.
5. Check the clearance and surface height.
6. Finally tighten trunk lid hinge and trunk lid striker.
7. Install trunk rear finisher. Refer to INT-57, "Removal and Installation".

TRUNK LID STRIKER ADJUSTMENT

Adjust trunk lid striker so that it becomes parallel with trunk lid lock insertion direction.

TRUNK LID STRIKER

TRUNK LID STRIKER : Exploded View

INFOID:0000000003819763

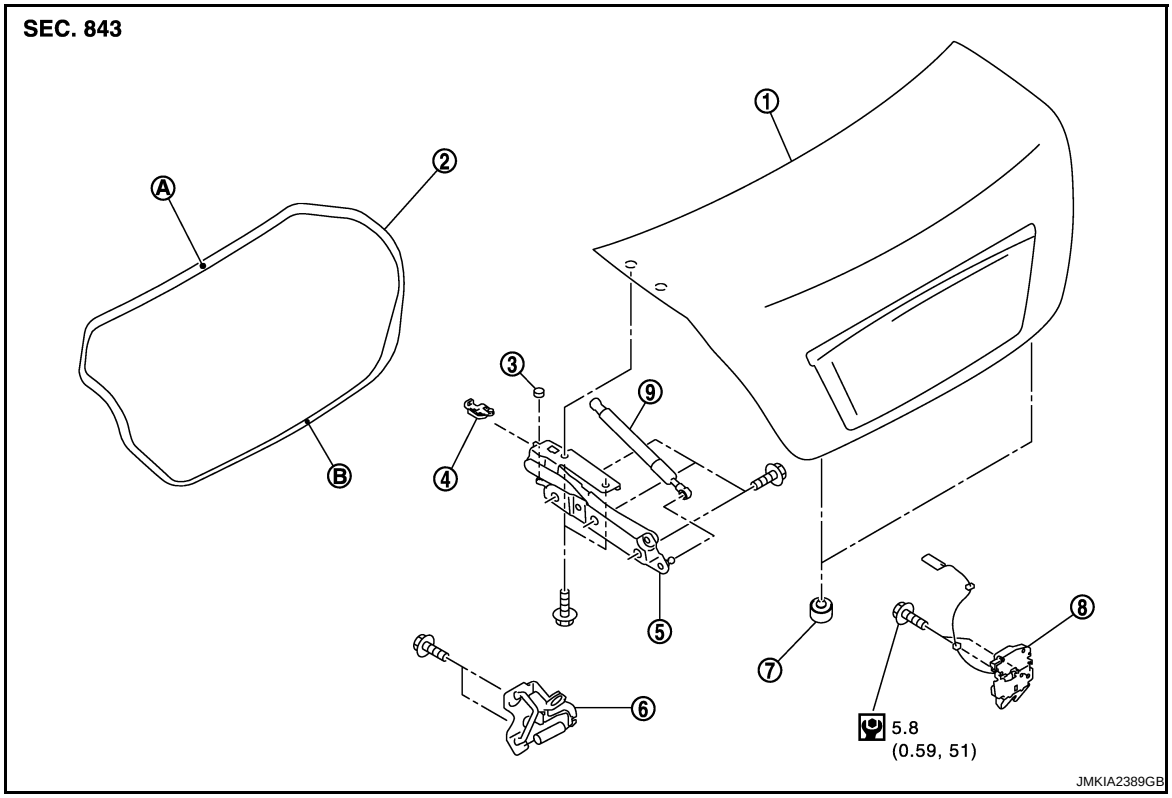

1.	Trunk lid	2.	Trunk lid weather-strip	3.	Cap
4.	Stopper	5.	Trunk lid hinge	6.	Trunk lid striker
7.	Bumper rubber	8.	Trunk lid lock assembly	9.	Trunk lid stay
A	: Center mark (upper)	B.	: Center mark (lower)		

Refer to GI-4, "Components" for symbols in the figure.

TRUNK LID STRIKER : Removal and Installation

INFOID:0000000003813416

REMOVAL

1. Remove trunk rear finisher. Refer to INT-57, "Removal and Installation".
2. Remove mounting bolts, and then remove trunk lid striker.

INSTALLATION

Install in the reverse order of removal.

CAUTION:

- **Check trunk lid open/close, lock/unlock operation after installation.**
- **When removing and installing trunk lid striker, perform the fitting adjustment. Refer to DLK-215, "TRUNK LID ASSEMBLY : Adjustment".**

TRUNK LID HINGE

TRUNK LID HINGE : Exploded View

INFOID:0000000003819765

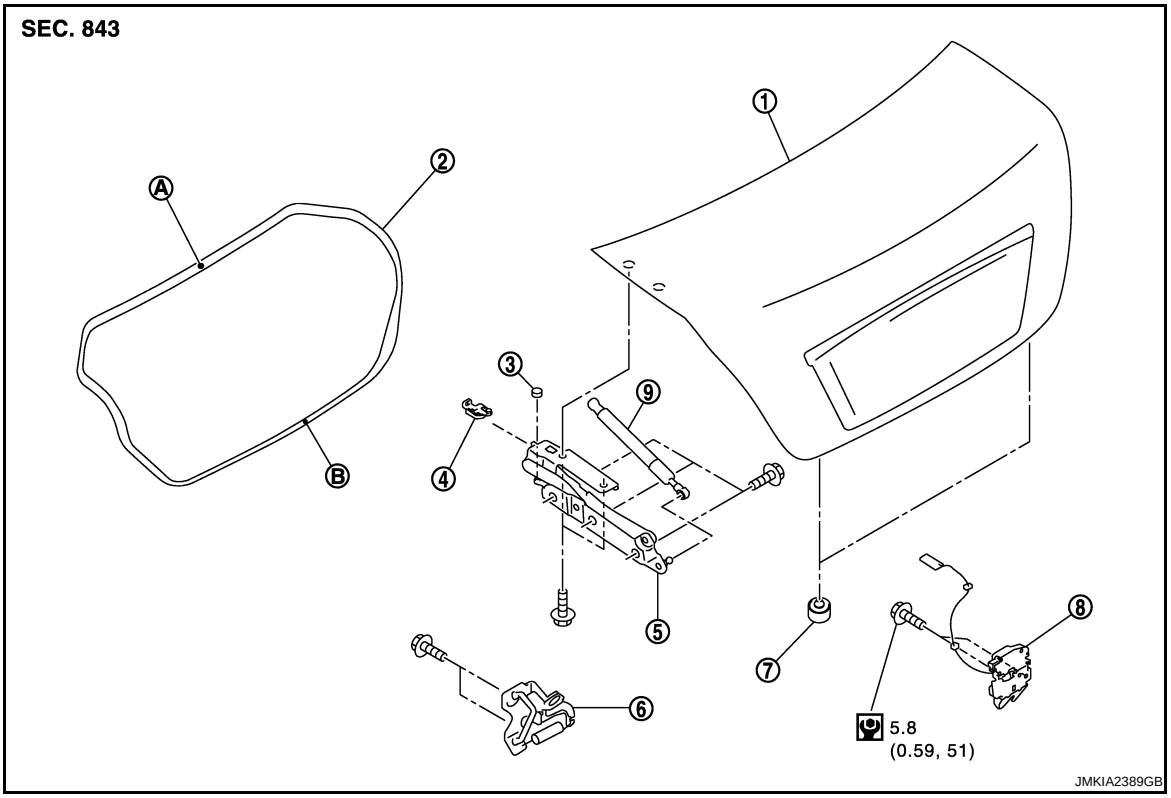

1.	Trunk lid	2.	Trunk lid weather-strip	3.	Cap
4.	Stopper	5.	Trunk lid hinge	6.	Trunk lid striker
7.	Bumper rubber	8.	Trunk lid lock assembly	9.	Trunk lid stay
A	: Center mark (upper)	B.	: Center mark (lower)		

Refer to GI-4, "Components" for symbols in the figure.

TRUNK LID HINGE : Removal and Installation

INFOID:0000000003813418

REMOVAL

1. Remove trunk lid assembly. Refer to DLK-214, "TRUNK LID ASSEMBLY : Removal and Installation".
2. Remove trunk lid stay from trunk lid hinge. Refer to DLK-218, "TRUNK LID STAY : Removal and Installation".
3. Remove trunk lid hinge mounting nuts (body side), and then remove trunk lid hinge.

INSTALLATION

Install in the reverse order of removal.

CAUTION:

- **Check trunk lid open/close, lock/unlock operation after installation.**
- **Check trunk lid hinge rotating part for poor lubrication. If necessary, apply body grease.**
- **When removing and installing trunk lid assembly, perform the fitting adjustment. Refer to DLK-215, "TRUNK LID ASSEMBLY : Adjustment".**
- **After installation, apply touch-up paint (the body color) onto the head of trunk lid hinge mounting bolts.**

TRUNK LID STAY

TRUNK LID STAY : Exploded View

INFOID:0000000003819766

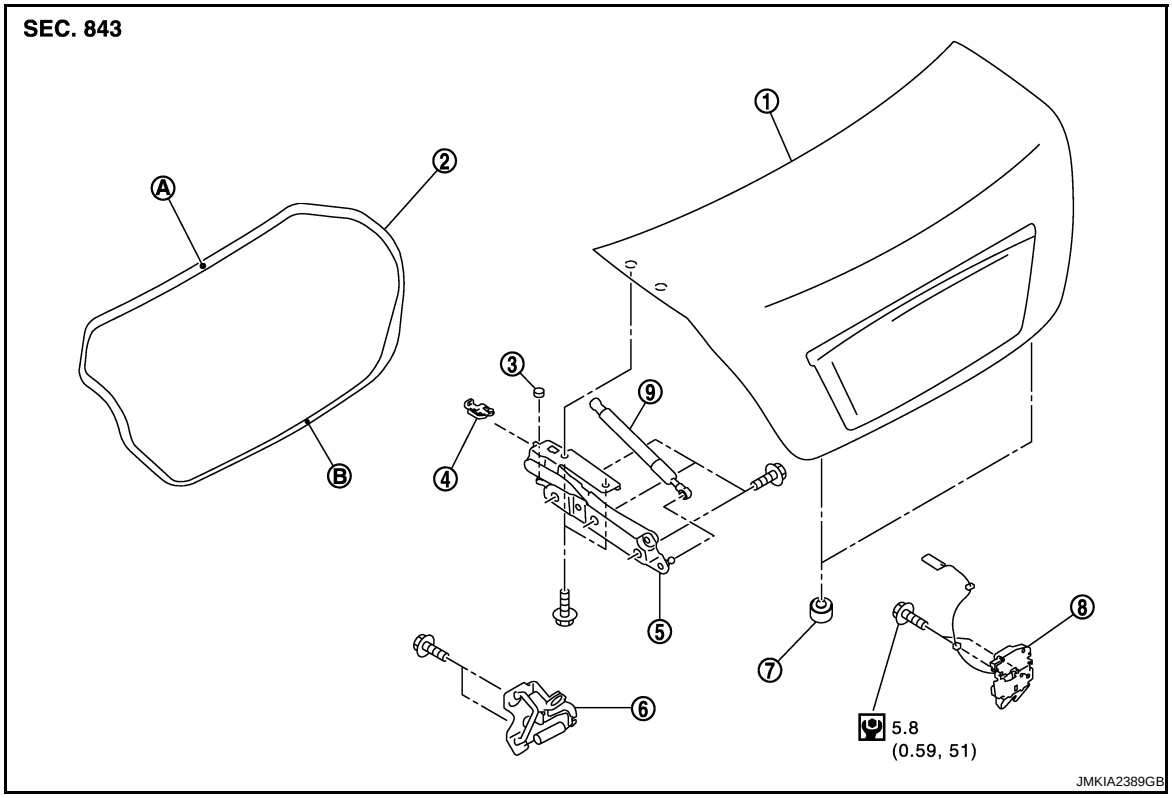

1.	Trunk lid	2.	Trunk lid weather-strip	3.	Cap
4.	Stopper	5.	Trunk lid hinge	6.	Trunk lid striker
7.	Bumper rubber	8.	Trunk lid lock assembly	9.	Trunk lid stay
A	: Center mark (upper)	B.	: Center mark (lower)		

Refer to GI-4, "Components" for symbols in the figure.

TRUNK LID STAY : Removal and Installation

INFOID:0000000003813420

REMOVAL

1. Support trunk lid with the proper material to prevent it from falling.

   WARNING:
   Bodily injury may occur if no supporting rod is holding the trunk lid open when removing the trunk lid stay.

2. Remove the metal clip (3) located on the connection between the trunk lid stay (1) and the stud ball (2) (trunk lid side) by using a flat-bladed screwdriver (A).
3. Remove trunk lid stay (trunk lid side).

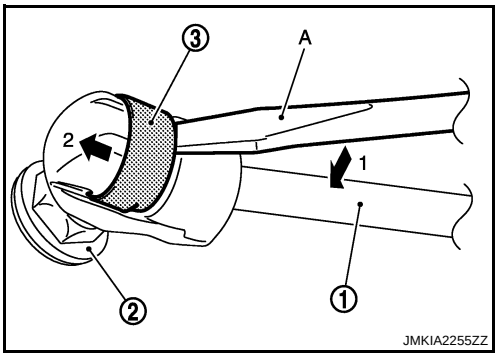

4. In the same way, remove trunk lid stay (body side).

INSTALLATION

Install in the reverse order of removal.

CAUTION:
Check trunk lid open/close operation after installation.

TRUNK LID WEATHER-STRIP

TRUNK LID WEATHER-STRIP : Exploded View

INFOID:0000000003819767

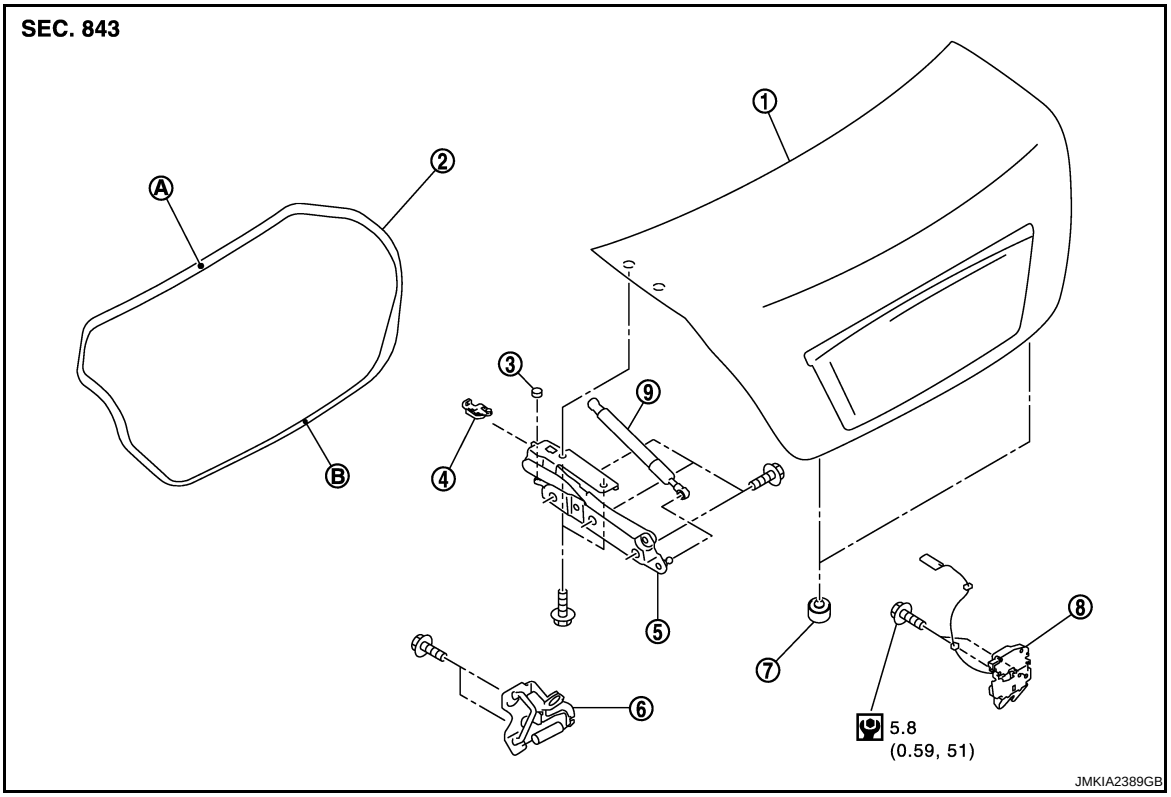

1.	Trunk lid	2.	Trunk lid weather-strip	3.	Cap
4.	Stopper	5.	Trunk lid hinge	6.	Trunk lid striker
7.	Bumper rubber	8.	Trunk lid lock assembly	9.	Trunk lid stay
A	: Center mark (upper)	B.	: Center mark (lower)		

Refer to GI-4, "Components" for symbols in the figure.

TRUNK LID WEATHER-STRIP : Removal and Installation

INFOID:0000000003813422

REMOVAL

Pull up and remove engagement with body from weather-strip joint.

CAUTION:
Never pull strongly on weather-strip.

INSTALLATION

1. Working from the upper section, align weather-strip center mark (upper) with vehicle center position mark and install weather-strip onto the vehicle.
2. For the lower section, align weather-strip center mark (lower) with center of trunk lid striker.
3. Pull weather-strip gently to ensure that there is no loose section.
   NOTE:
   Check that weather-strip fits tightly in each corner.

HOOD LOCK

Exploded View

INFOID:0000000003813423

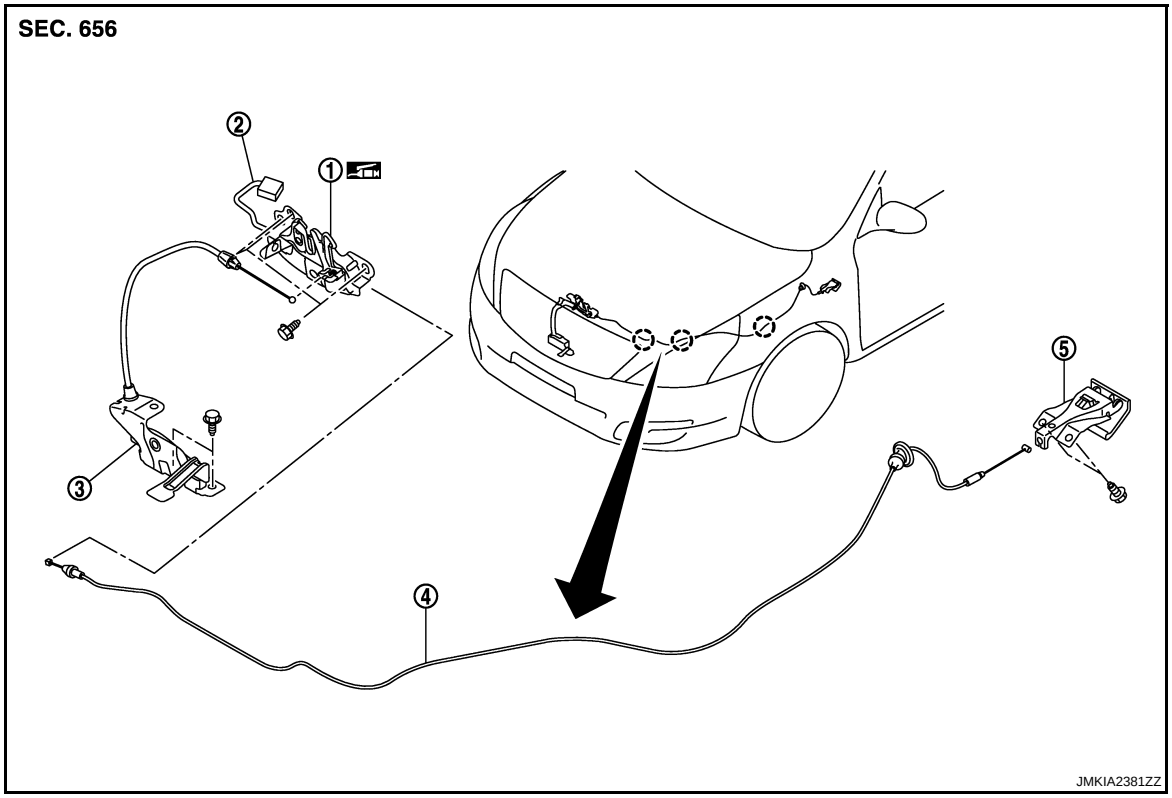

1. Hood lock
2. Hood switch
3. Bell crank assembly
4. Hood lock control cable
5. Hood lock opener

: Clip

Refer to GI-4, "Components" for symbols in the figure.

Removal and Installation

INFOID:0000000003813424

REMOVAL

CAUTION:

Check wiring of hood lock control cable before removal.

1. Remove mounting bolts, and then remove hood lock assembly (1).
   NOTE:
   Press the lever downward to avoid pin (A), then pull out hood lock assembly upward.
2. Disconnect hood lock control cable (2) from hood lock assembly.

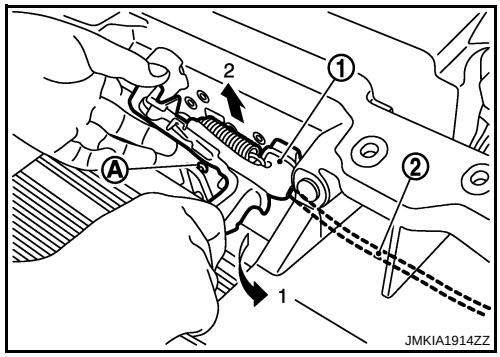

3. Disconnect bell crank assembly cable from hood lock assembly.
4. Remove air duct (inlet). Refer to EM-26, "Removal and Installation".
5. Disconnect hood switch connector and remove hood lock assembly.
6. Remove bolts and remove bell crank assembly.

7. Disconnect hood lock control cable from instrument lower panel (LH).
8. Remove fender protector (LH). Refer to EXT-22, "FENDER PROTECTOR : Removal and Installation".
9. Remove hood lock control cable clamp.
10. Remove grommet on the lower dash, and pull the hood lock control cable toward the passenger compartment.
    CAUTION:
    While pulling, never damage (peeling) the outside of hood lock control cable.

INSTALLATION

Install in the reverse order of removal.

CAUTION:

- **Never bend cable too much. Keeping the radius 100 mm (3.937 in) or more.**
- **Check that cable is not offset from the positioning grommet, and apply the sealant to the grommet (A) properly.**

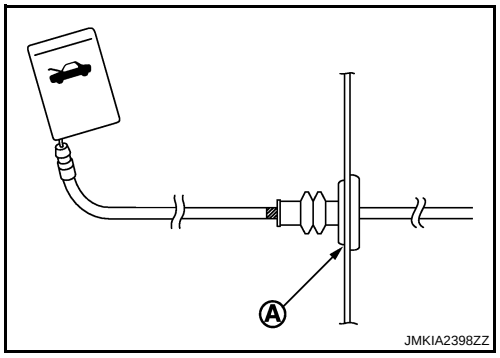

- **Check that hood lock control cable is properly engaged with hood lock.**
- **After installation, perform hood fitting adjustment. Refer to DLK-193, "HOOD ASSEMBLY : Adjustment".**
- **After installation, perform hood lock control inspection. Refer to DLK-221, "Inspection".**

Inspection

INFOID:0000000003813425

NOTE:
If the hood lock cable is bent or deformed, replace it.

1. Check that secondary latch is properly engaged with secondary striker [6.8 mm (0.268 in)] by hood weight.
2. While operating hood opener, carefully check that the front end of hood is raised by approximately 20.0 mm (0.787 in). Also check that hood opener returns to the original position.
3. Check that hood opener operating is condition 49 N (5.0 kg, 11.0 lb) or below.
4. Install so that static closing force of hood is 94 – 490 N (9.6 – 50.0 kg, 21.1 – 110 lb).
   NOTE:
   - Exert vertical force on right side and left side of hood lock.
   - Do not simultaneously press both sides.
5. Check the hood lock lubrication condition. If necessary, apply body grease to hood lock.

FRONT DOOR LOCK

DOOR LOCK

DOOR LOCK : Exploded View

INFOID:0000000003813426

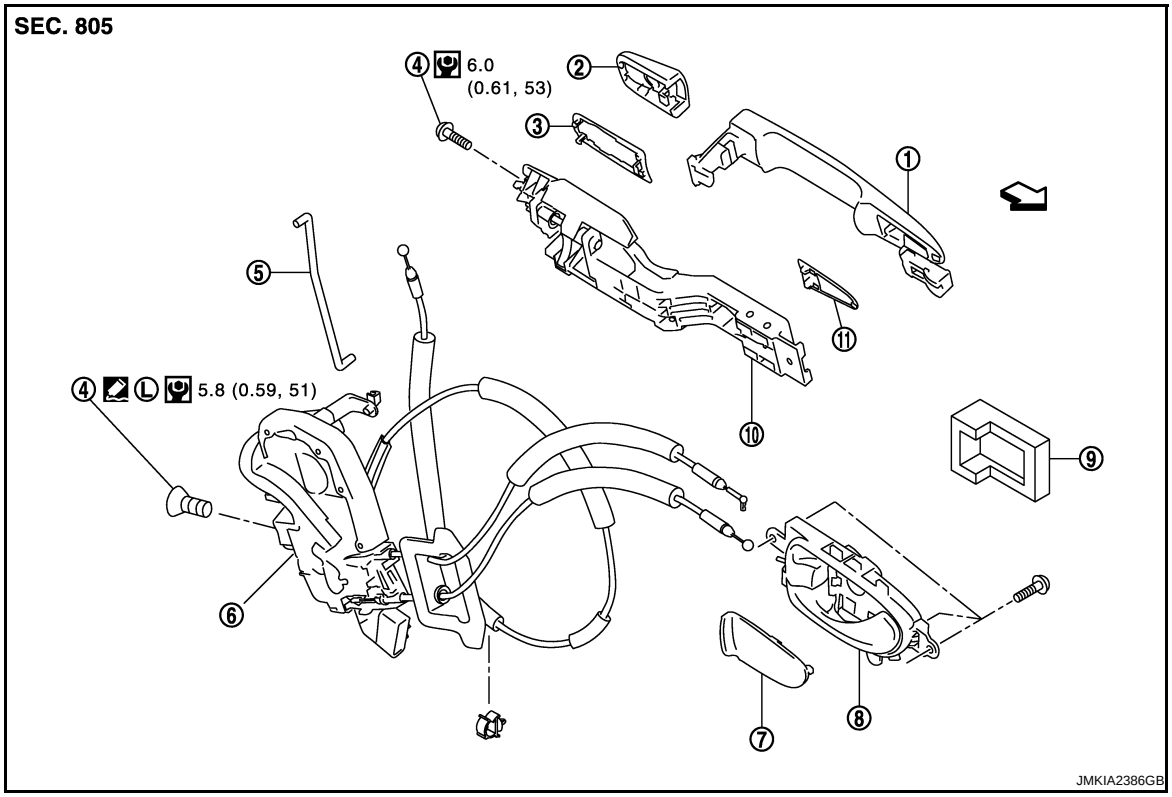

1. Outside handle	2. Door key cylinder assembly (driver side) Outside handle escutcheon (passenger side)	3. Rear gasket
4. TORX bolt	5. Key rod (driver side)	6. Door lock assembly
7. Inside handle escutcheon	8. Inside handle	9. Seal
10. Outside handle bracket	11. Front gasket	

⇦ : Vehicle front

Refer to GI-4, "Components" for symbols in the figure.

DOOR LOCK : Removal and Installation

INFOID:0000000003813427

REMOVAL

1. Remove front door finisher. Refer to INT-30, "DRIVER SIDE : Removal and Installation" (driver side) or INT-33, "PASSENGER SIDE : Removal and Installation" (passenger side).
2. Remove front door glass. Refer to GW-17, "Removal and Installation".
3. Remove front door module assembly. Refer to GW-20, "Removal and Installation".
4. Remove outside handle and outside handle bracket. Refer to DLK-224, "OUTSIDE HANDLE : Removal and Installation".
5. Remove door lock assembly TORX bolts.
6. Disconnect door lock actuator connector, and then remove door lock assembly.
7. Remove key rod from door lock assembly.

INSTALLATION

Install in the reverse order of removal.

CAUTION:
- **When installing each rod, rotate rod holder until a click is felt.**
- **Check door open/close, lock/unlock operation after installation.**

INSIDE HANDLE

INSIDE HANDLE : Exploded View

INFOID:0000000003817716

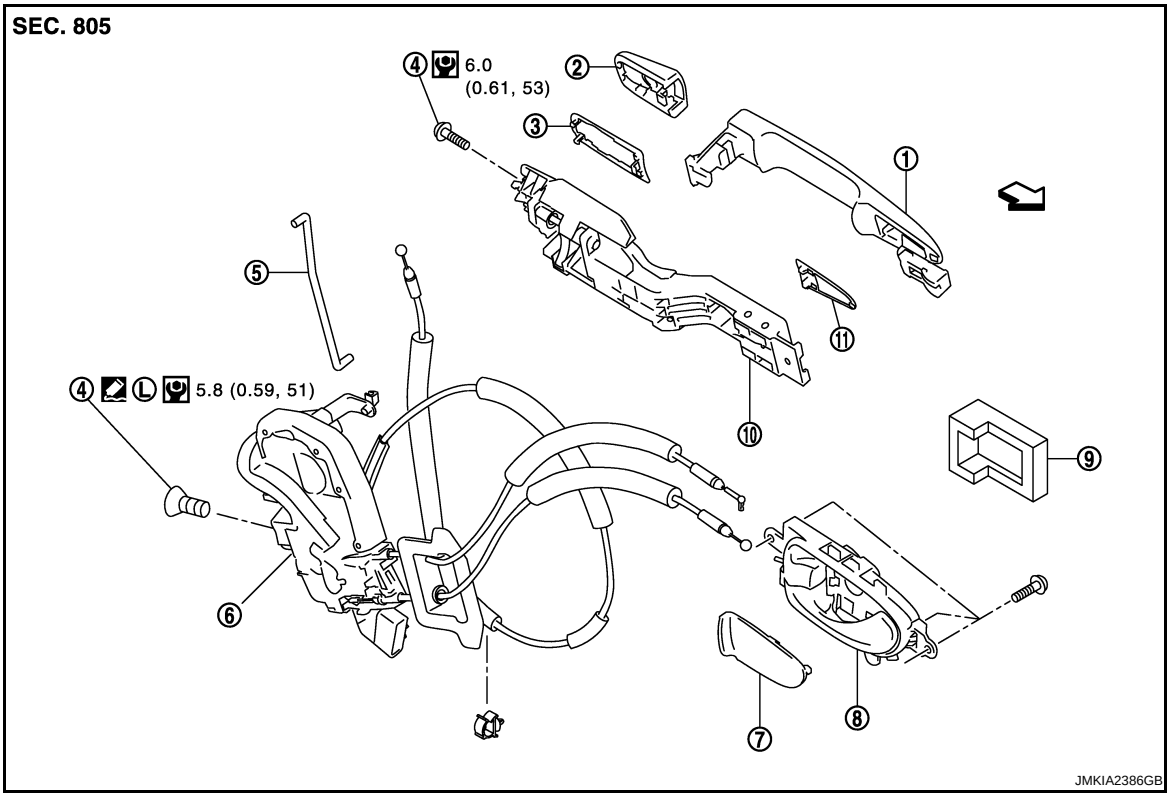

1.	Outside handle	2.	Door key cylinder assembly (driver side) Outside handle escutcheon (passenger side)	3.	Rear gasket
4.	TORX bolt	5.	Key rod (driver side)	6.	Door lock assembly
7.	Inside handle escutcheon	8.	Inside handle	9.	Seal
10.	Outside handle bracket	11.	Front gasket		

⇦ : Vehicle front

Refer to GI-4, "Components" for symbols in the figure.

INSIDE HANDLE : Removal and Installation

INFOID:0000000003813429

REMOVAL

1. Remove front door finisher. Refer to INT-30, "DRIVER SIDE : Removal and Installation" (driver side) or INT-33, "PASSENGER SIDE : Removal and Installation" (passenger side).
2. Disconnect inside handle cable.
3. Remove inside handle mounting screws, and then remove the inside handle.

INSTALLATION

Install in the reverse order of removal.

CAUTION:

Check door open/close, lock/unlock operation after installation.

OUTSIDE HANDLE

OUTSIDE HANDLE : Exploded View

INFOID:0000000003817718

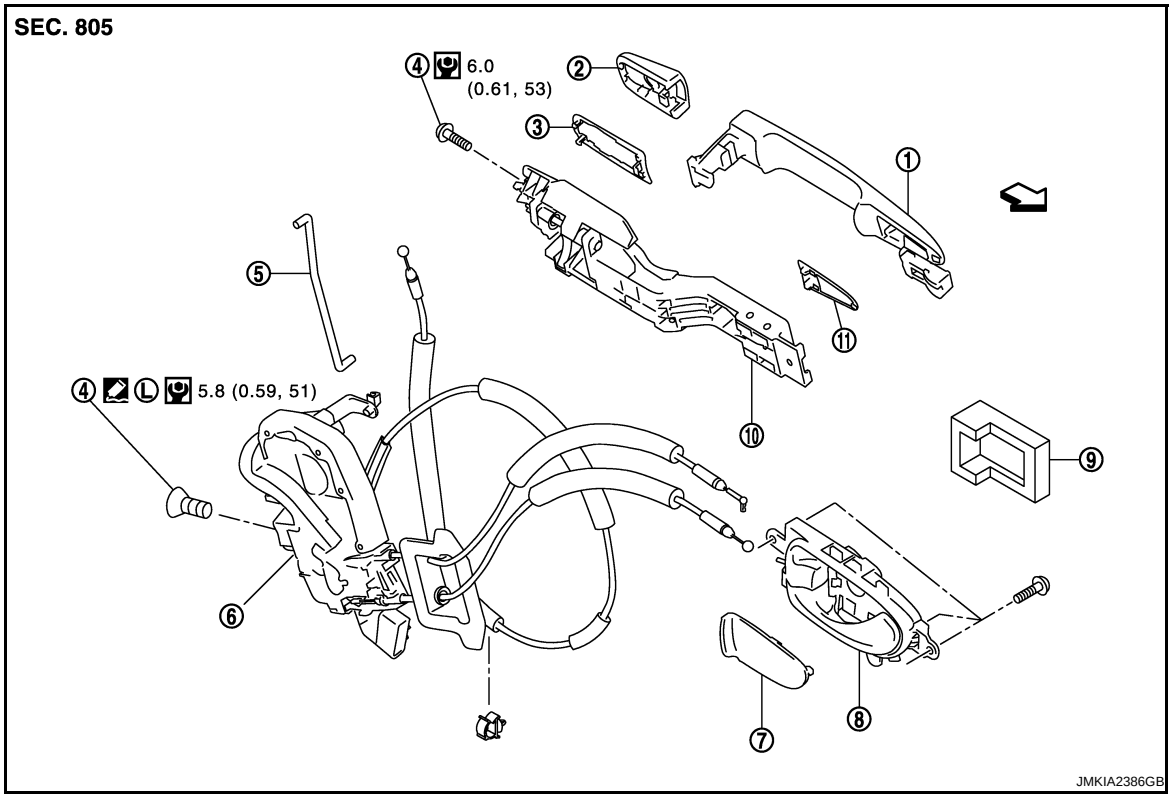

1. Outside handle	2. Door key cylinder assembly (driver side) Outside handle escutcheon (passenger side)	3. Rear gasket
4. TORX bolt	5. Key rod (driver side)	6. Door lock assembly
7. Inside handle escutcheon	8. Inside handle	9. Seal
10. Outside handle bracket	11. Front gasket	

⇦ : Vehicle front

Refer to GI-4, "Components" for symbols in the figure.

OUTSIDE HANDLE : Removal and Installation

INFOID:0000000003813431

REMOVAL

1. Remove front door finisher. Refer to INT-30, "DRIVER SIDE : Removal and Installation" (driver side) or INT-33, "PASSENGER SIDE : Removal and Installation" (passenger side).
2. Remove front door glass. Refer to GW-17, "Removal and Installation".
3. Remove front door module assembly. Refer to GW-20, "Removal and Installation".
4. Disconnect door antenna and door request switch connector and remove harness clamp (models with Intelligent Key system) on outside handle bracket.

5. Remove door side grommet, and loosen TORX bolt from grommet hole.
CAUTION:
Never remove TORX bolt forcibly.

⬅ : TORX bolt

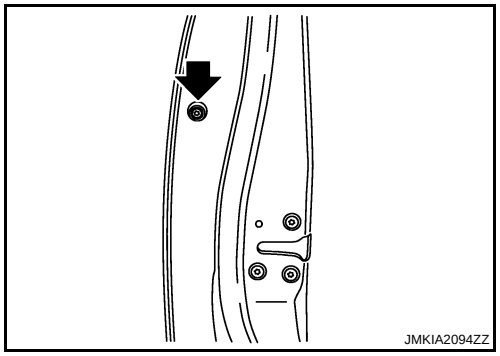

6. Reach in to separate key rod (2) connection [on the door key cylinder assembly (1)] (driver side).

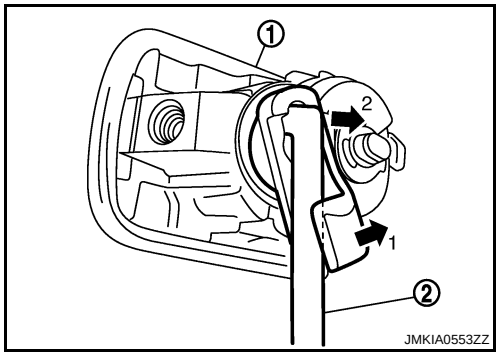

7. While pulling outside handle, remove door key cylinder assembly (driver side) or outside handle escutcheon (passenger side).

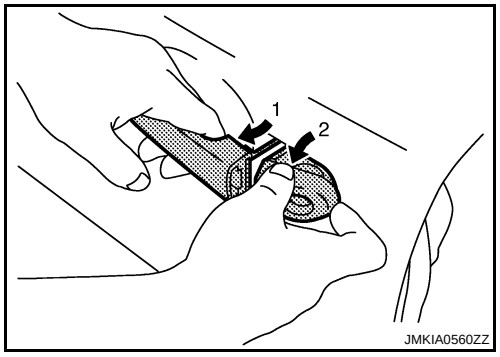

8. While pulling outside handle (1), slide toward rear of vehicle to remove outside handle.

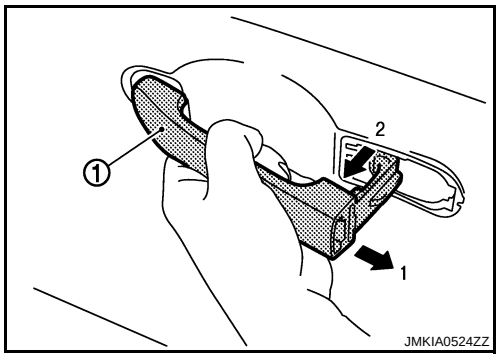

9. Remove front gasket and rear gasket.

10. While pulling outside handle bracket, slide toward rear of vehicle to remove outside handle bracket.

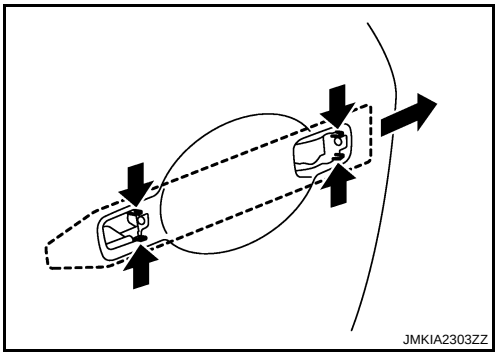

11. Reach in to separate outside handle cable connection on outside handle bracket.

INSTALLATION

Install in the reverse order of removal.

CAUTION:

- **When installing each rod, rotate rod holder until a click is felt.**
- **Check door open/close, lock/unlock operation after installation.**

REAR DOOR LOCK

DOOR LOCK

DOOR LOCK : Exploded View

INFOID:0000000003813432

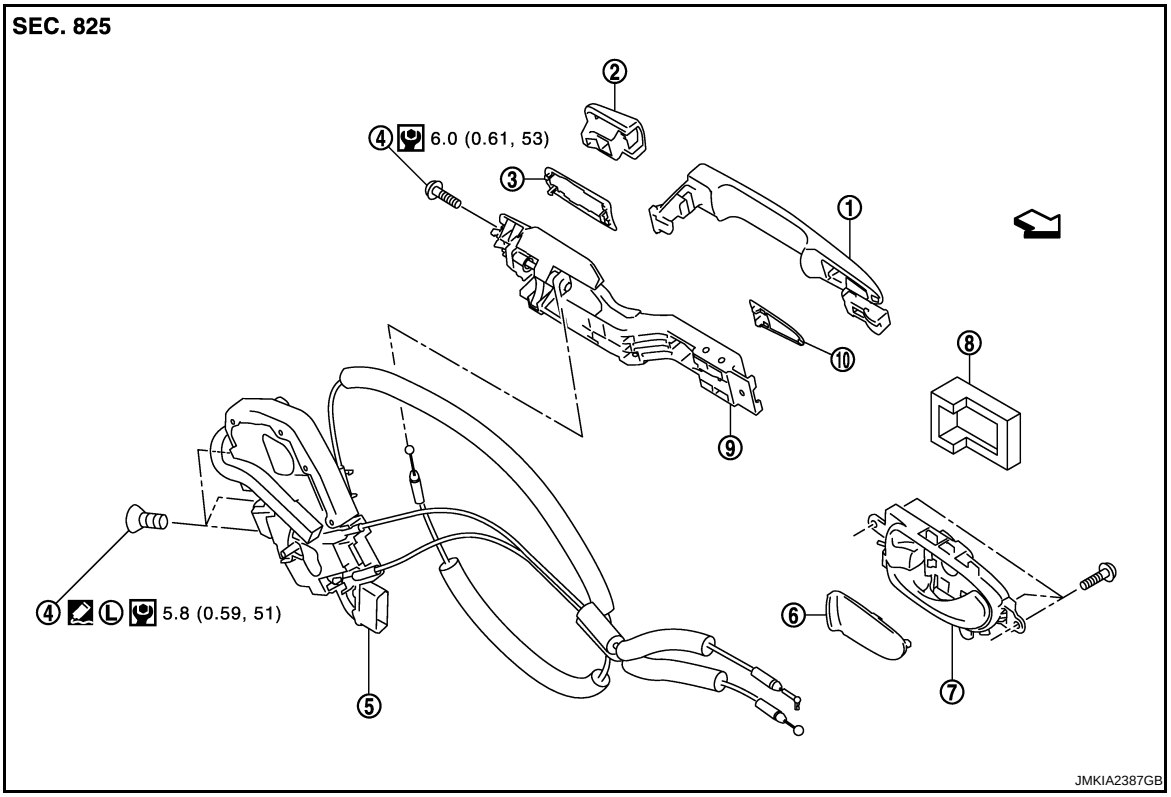

1. Outside handle
2. Outside handle escutcheon
3. Rear gasket
4. TORX bolt
5. Door lock assembly
6. Inside handle escutcheon
7. Inside handle
8. Seal
9. Outside handle bracket
10. Front gasket

⇦ : Vehicle front

Refer to GI-4, "Components" for symbols in the figure.

DOOR LOCK : Removal and Installation

INFOID:0000000003813433

REMOVAL

1. Remove outside handle. Refer to DLK-229, "OUTSIDE HANDLE : Removal and Installation".
2. Remove rear door finisher. Refer to INT-36, "Removal and Installation".
3. Remove sealing screen. Refer to GW-23, "Removal and Installation".
4. Remove corner piece assembly. Refer to GW-23, "Exploded View".
5. Fully close the rear door glass.
6. Reach in to separate outside handle cable connection on outside handle bracket.
7. Remove door lock TORX bolts.
8. Remove door lock assembly.

INSTALLATION

Install in the reverse order of removal.

CAUTION:

Check door open/close, lock/unlock operation after installation.

INSIDE HANDLE

INSIDE HANDLE : Exploded View

INFOID:0000000003817719

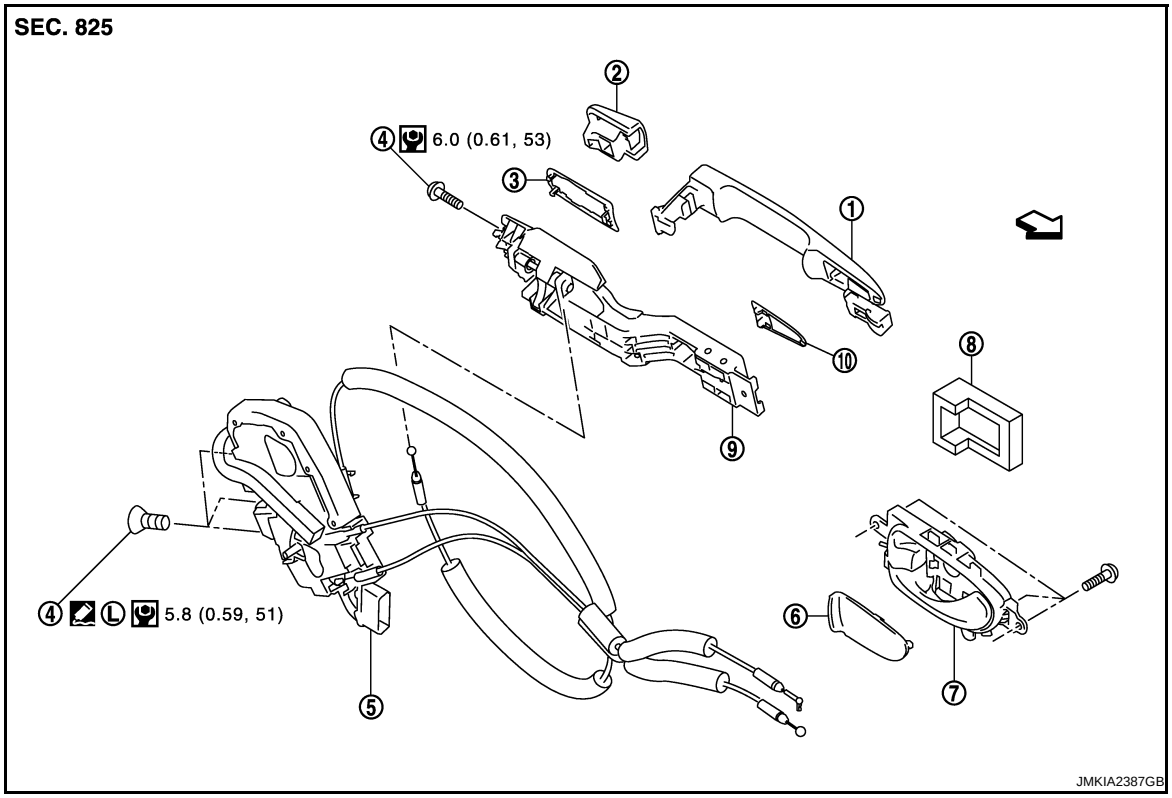

1. Outside handle
2. Outside handle escutcheon
3. Rear gasket
4. TORX bolt
5. Door lock assembly
6. Inside handle escutcheon
7. Inside handle
8. Seal
9. Outside handle bracket
10. Front gasket

⇦ : Vehicle front

Refer to GI-4, "Components" for symbols in the figure.

INSIDE HANDLE : Removal and Installation

INFOID:0000000003813435

REMOVAL

1. Remove rear door finisher. Refer to INT-36, "Removal and Installation".
2. Disconnect inside handle cable.
3. Remove inside handle mounting screws, and then remove inside handle.

INSTALLATION

Install in the reverse order of removal.

CAUTION:

Check door open/close, lock/unlock operation after installation.

OUTSIDE HANDLE

OUTSIDE HANDLE : Exploded View

INFOID:0000000003817720

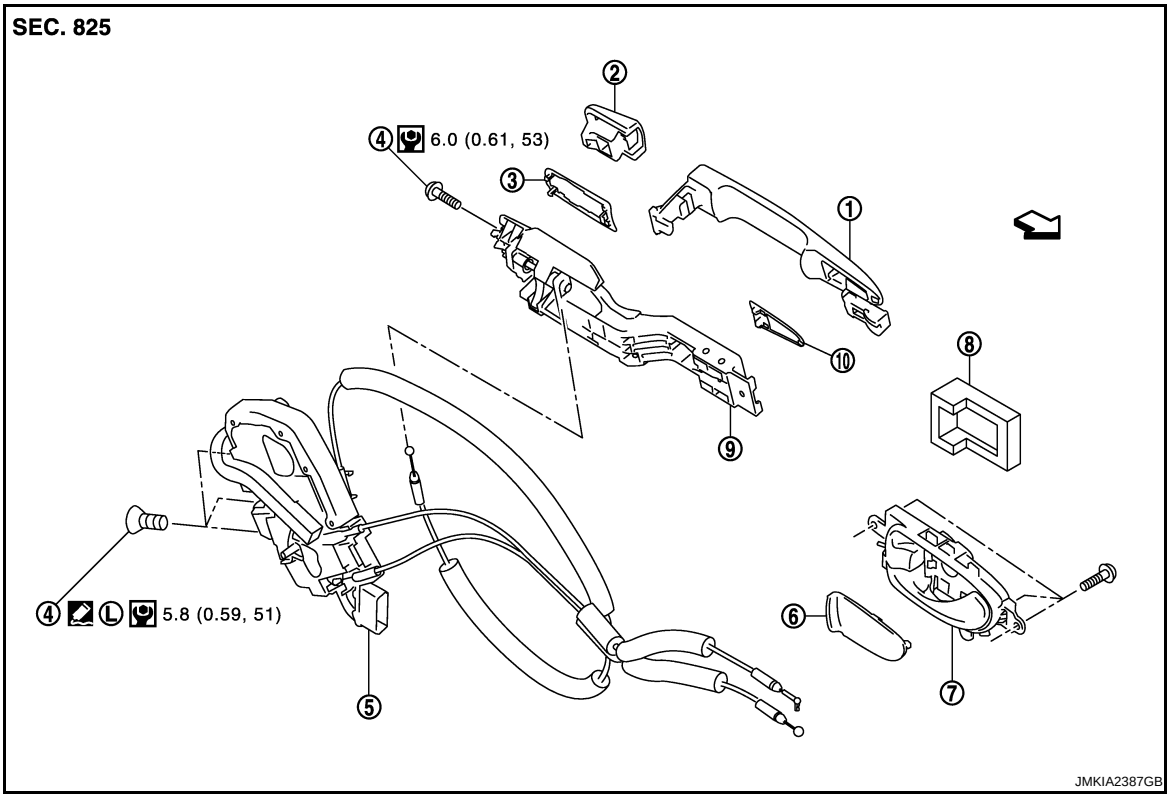

1. Outside handle
2. Outside handle escutcheon
3. Rear gasket
4. TORX bolt
5. Door lock assembly
6. Inside handle escutcheon
7. Inside handle
8. Seal
9. Outside handle bracket
10. Front gasket

⇦ : Vehicle front

Refer to GI-4, "Components" for symbols in the figure.

OUTSIDE HANDLE : Removal and Installation

INFOID:0000000003813437

REMOVAL

1. Remove door side grommet, and loosen TORX bolt from grommet hole.
   CAUTION:
   Never remove TORX bolt forcibly.

   ⬅ : TORX bolt

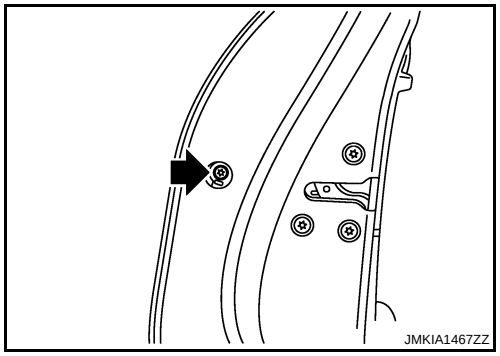

2. While pulling outside handle, remove outside handle escutcheon.

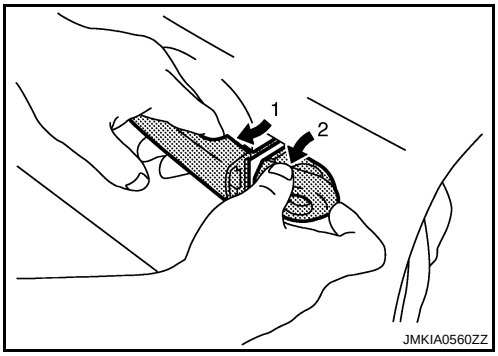

3. While pulling outside handle (1), slide toward rear of vehicle to remove outside handle.

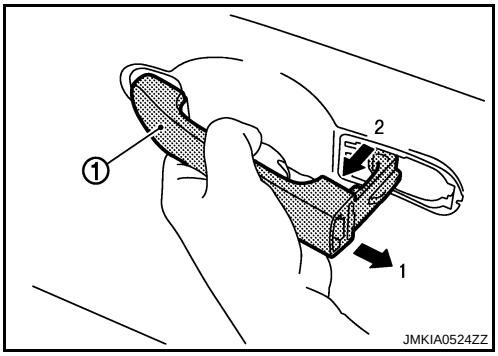

4. Remove rear door finisher. Refer to INT-36, "Removal and Installation".
5. Remove sealing screen. Refer to GW-23, "Removal and Installation".
6. Fully close rear door glass.
7. Remove front gasket and rear gasket.
8. While pulling outside handle bracket, slide toward rear of vehicle to remove outside handle bracket.

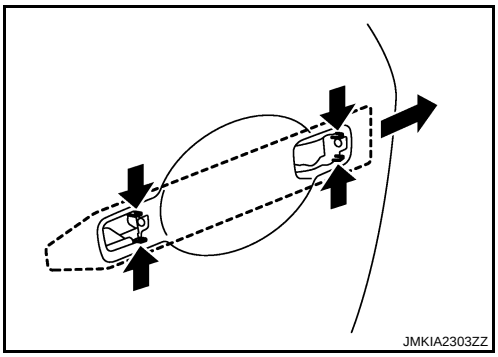

9. Reach in to separate outside handle cable connection on outside handle bracket.

INSTALLATION

Install in the reverse order of removal.

CAUTION:

Check door open/close, lock/unlock operation after installation.

TRUNK LID LOCK

Exploded View

INFOID:0000000003819768

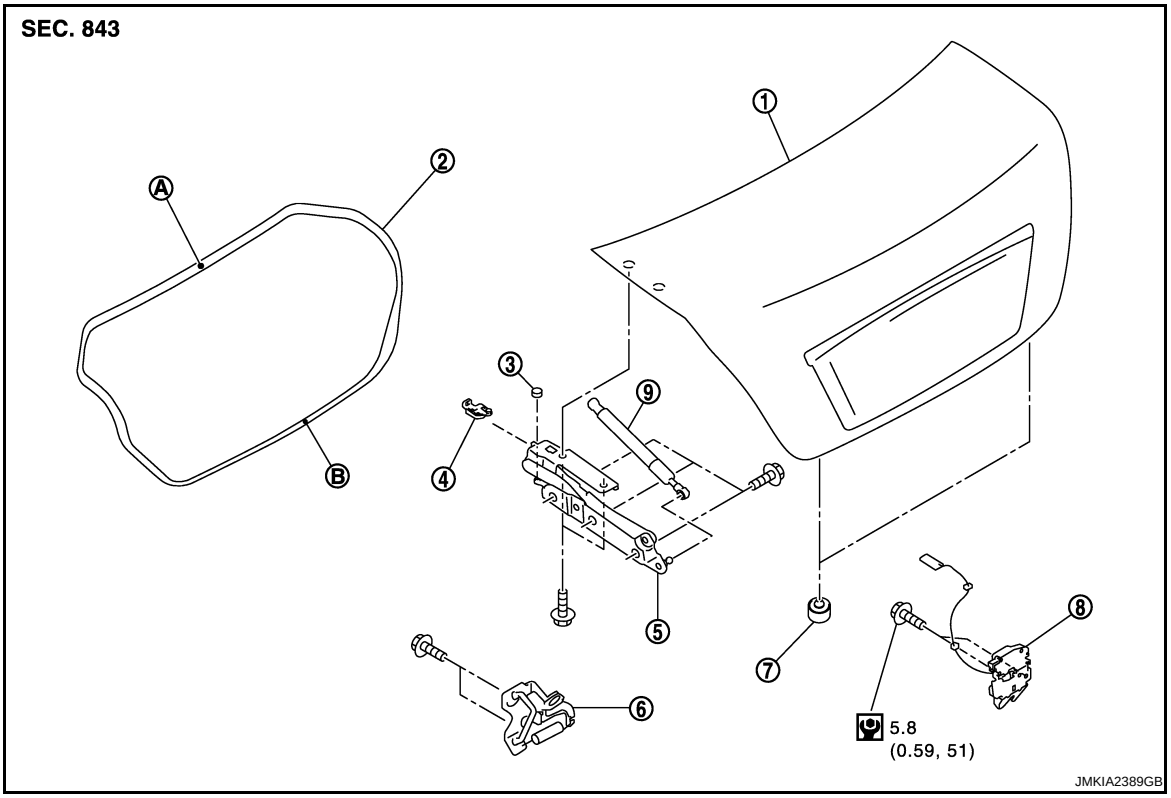

1.	Trunk lid	2.	Trunk lid weather-strip	3.	Cap
4.	Stopper	5.	Trunk lid hinge	6.	Trunk lid striker
7.	Bumper rubber	8.	Trunk lid lock assembly	9.	Trunk lid stay
A	: Center mark (upper)	B.	: Center mark (lower)		

Refer to GI-4, "Components" for symbols in the figure.

Removal and Installation

INFOID:0000000003813439

REMOVAL

1. Remove trunk lid finisher inner. Refer to INT-59, "Removal and Installation".
2. Disconnect trunk lid opener cable.
3. Disconnect trunk lid lock assembly and trunk lid opener switch connectors.
4. Remove mounting bolts and remove trunk lid lock assembly.

INSTALLATION

Install in the reverse order of removal.

CAUTION:

Check trunk lid open/close, lock/unlock operation after installation.

FUEL FILLER LID OPENER

Exploded View

INFOID:0000000003813440

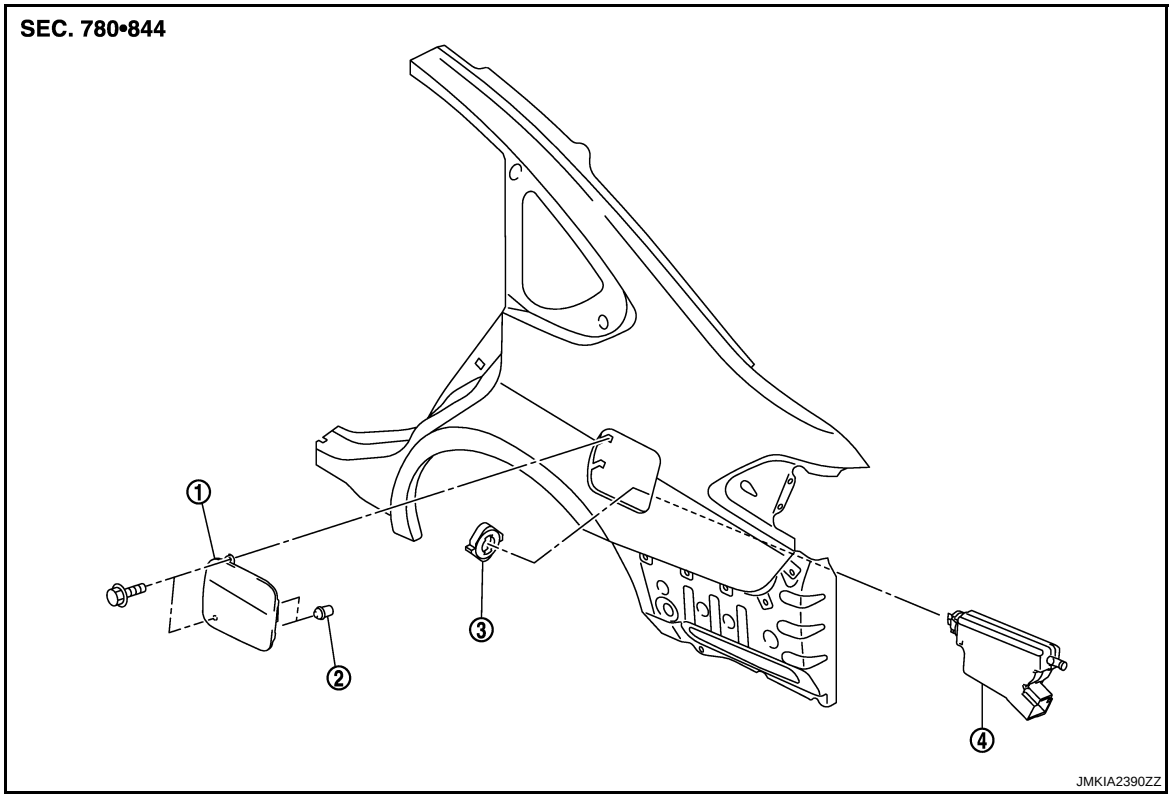

1. Fuel filler lid assembly
2. Bumper rubber
3. Lock nut
4. Fuel filler lid opener actuator

Removal and Installation

INFOID:0000000003813441

NOTE:
When fuel filler lid opener actuator (1) is malfunctioning, pull the rod to open fuel filler lid.

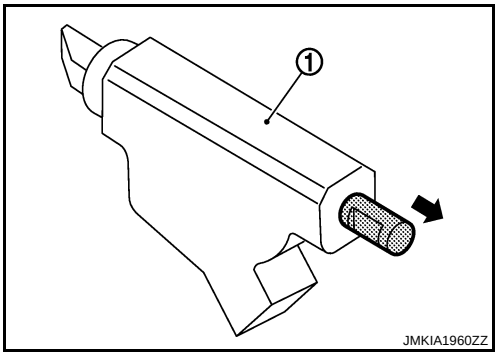

REMOVAL

1. Remove mounting screws, and then remove fuel filler lid.
2. Rotate lock nut counterclockwise, and then remove lock nut.
3. Push fuel filler lid opener actuator behind the vehicle, while pushing the pawl.
4. Remove rear wheel house finisher (LH). Refer to INT-57, "Removal and Installation".
5. Disconnect harness connector and remove fuel filler lid opener actuator.

INSTALLATION

Install in the reverse order of removal.

CAUTION:

After installation, apply the touch-up paint (the body color) onto the head of the mounting screws.

DOOR SWITCH

Exploded View

INFOID:0000000003795126

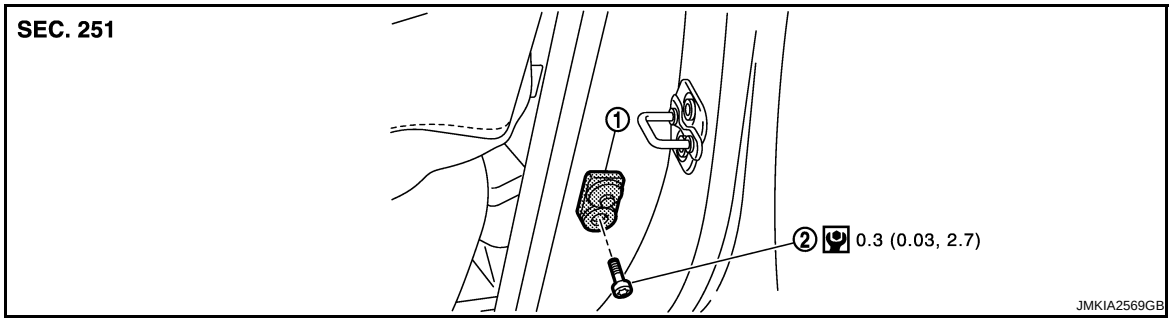

1. Door switch
2. Trox bolt

Removal and Installation

INFOID:0000000003795127

REMOVAL

1. Remove the door switch trox bolt (A), and then remove door switch (1).

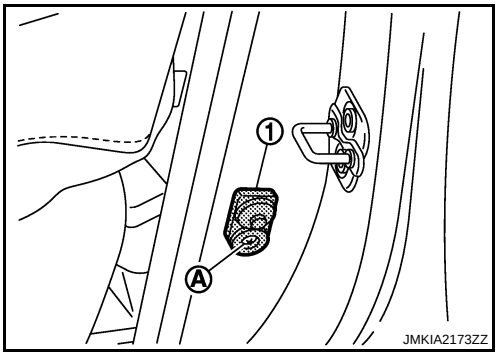

INSTALLATION

Install in the reverse order of removal.

INSIDE KEY ANTENNA

INSTRUMENT CENTER

INSTRUMENT CENTER : Exploded View

INFOID:0000000003795128

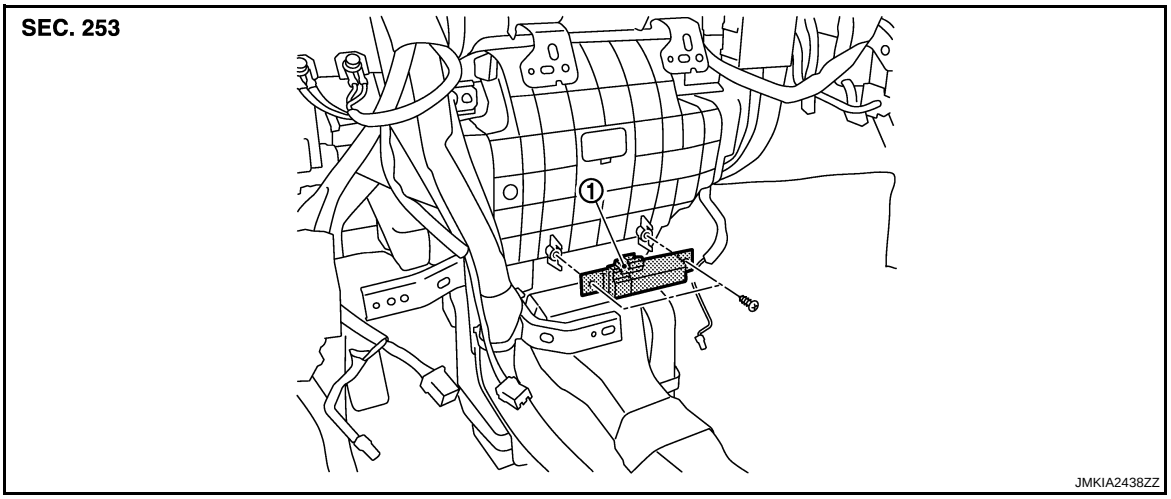

1. Inside key antenna (instrument center)

INSTRUMENT CENTER : Removal and Installation

INFOID:0000000003795129

REMOVAL

1. Remove the AV C/U (audio unit). Refer to AV-37, "Removal and Installation".
2. Remove the key antenna (instrument center) mounting screws (A), and then remove inside key antenna (instrument center) (1).

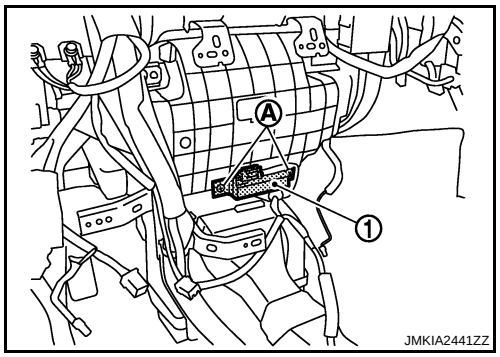

INSTALLATION

Install in the reverse order of removal.

CONSOLE

CONSOLE : Exploded View

INFOID:0000000003795130

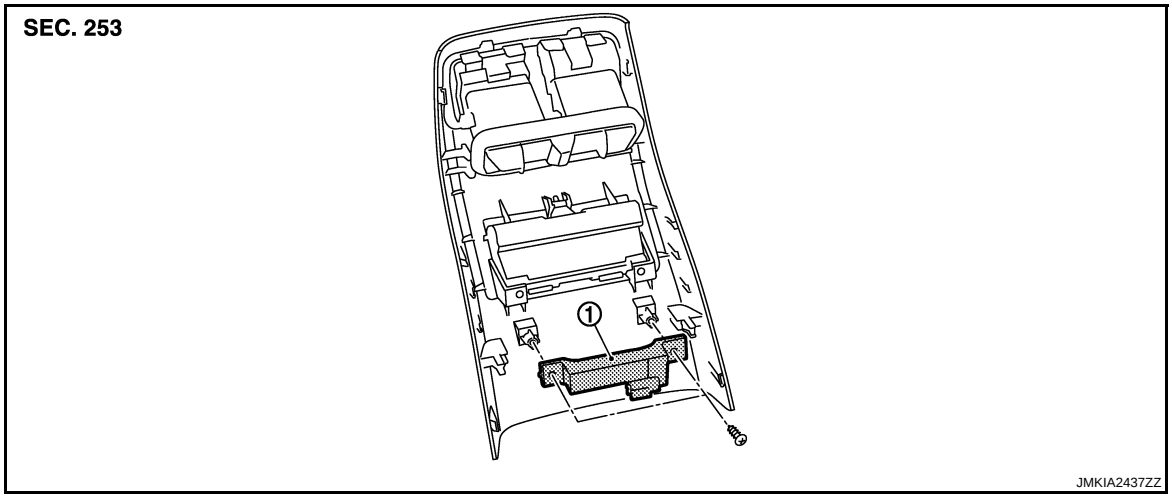

1. Inside key antenna (console)

CONSOLE : Removal and Installation

INFOID:0000000003795131

REMOVAL

1. Remove the console pocket and rear finisher. Refer to IP-22, "Removal and Installation".
2. Remove the inside key antenna (console) mounting screws (A), and then remove inside key antenna (console) (1) from console rear finisher (2).

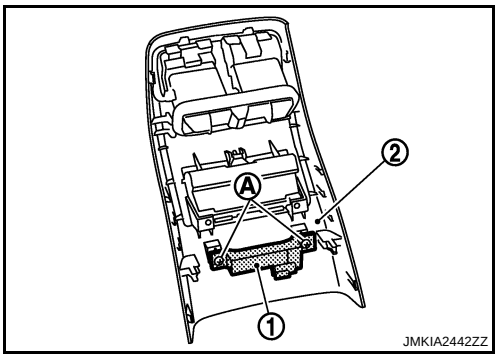

INSTALLATION

Install in the reverse order of removal.

TRUNK ROOM

TRUNK ROOM : Exploded View

INFOID:0000000003795132

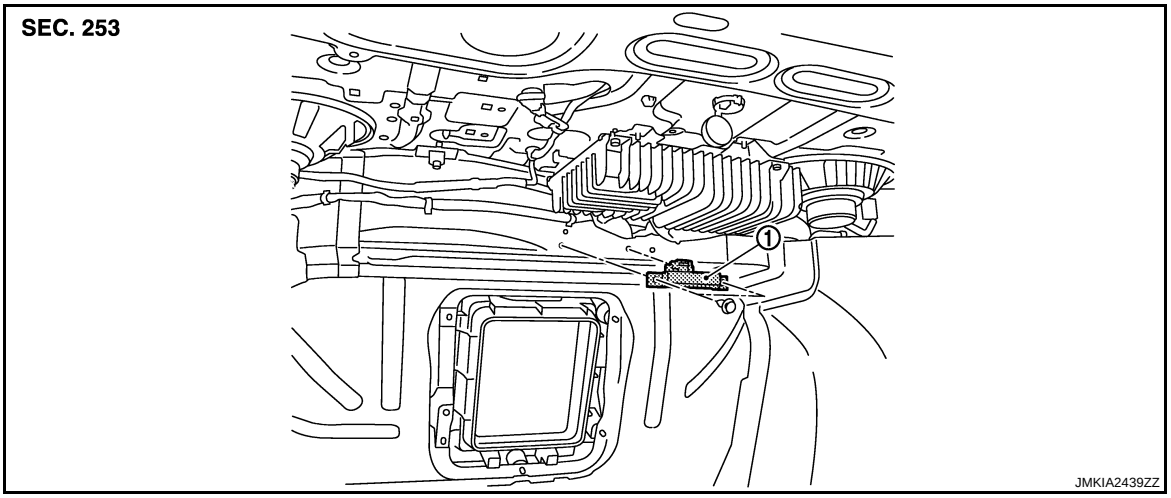

1. Inside key antenna (trunk room)

TRUNK ROOM : Removal and Installation

INFOID:0000000003795133

REMOVAL

1. Remove the inside key antenna (trunk room) mounting clips (A), and then remove inside key antenna (trunk room) (1).

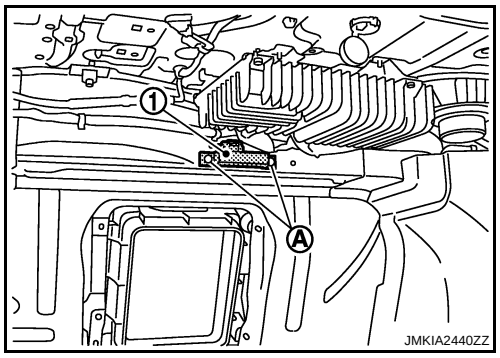

INSTALLATION

Install in the reverse order of removal.

OUTSIDE KEY ANTENNA

DRIVER SIDE

DRIVER SIDE : Exploded View

INFOID:0000000003795134

Refer to DLK-224, "OUTSIDE HANDLE : Exploded View".

DRIVER SIDE : Removal and Installation

INFOID:0000000003795135

REMOVAL

Remove the front outside handle LH. Refer to DLK-224, "OUTSIDE HANDLE : Removal and Installation".

INSTALLATION

Install in the reverse order of removal.

PASSENGER SIDE

PASSENGER SIDE : Exploded View

INFOID:0000000003795136

Refer to DLK-224, "OUTSIDE HANDLE : Exploded View".

PASSENGER SIDE : Removal and Installation

INFOID:0000000003795137

REMOVAL

Remove the front outside handle RH. Refer to DLK-224, "OUTSIDE HANDLE : Removal and Installation".

INSTALLATION

Install in the reverse order of removal.

REAR BUMPER

REAR BUMPER : Exploded View

INFOID:0000000003795138

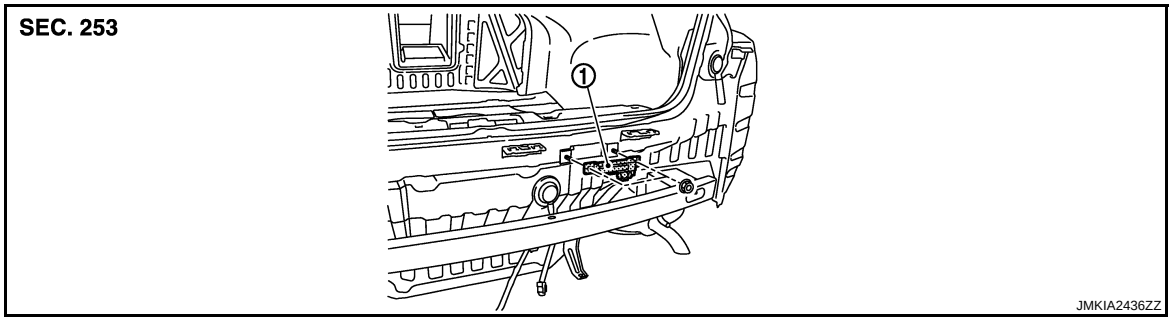

1. Outside key antenna (rear bumper)

REAR BUMPER : Removal and Installation

INFOID:0000000003795139

REMOVAL

1. Remove the rear bumper fascia. Refer to EXT-16, "Removal and Installation".

2. Remove the outside key antenna (rear bumper) mounting clips (A), and then remove outside key antenna (rear bumper) (1).

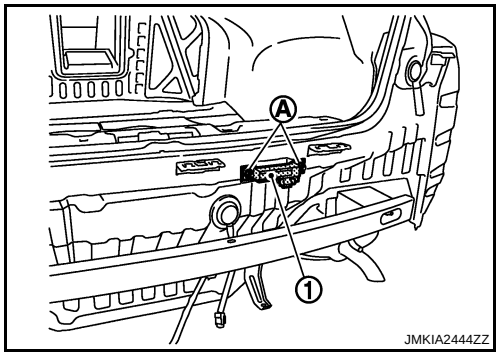

INSTALLATION

Install in the reverse order of removal.

INTELLIGENT KEY WARNING BUZZER

Exploded View

INFOID:0000000003795140

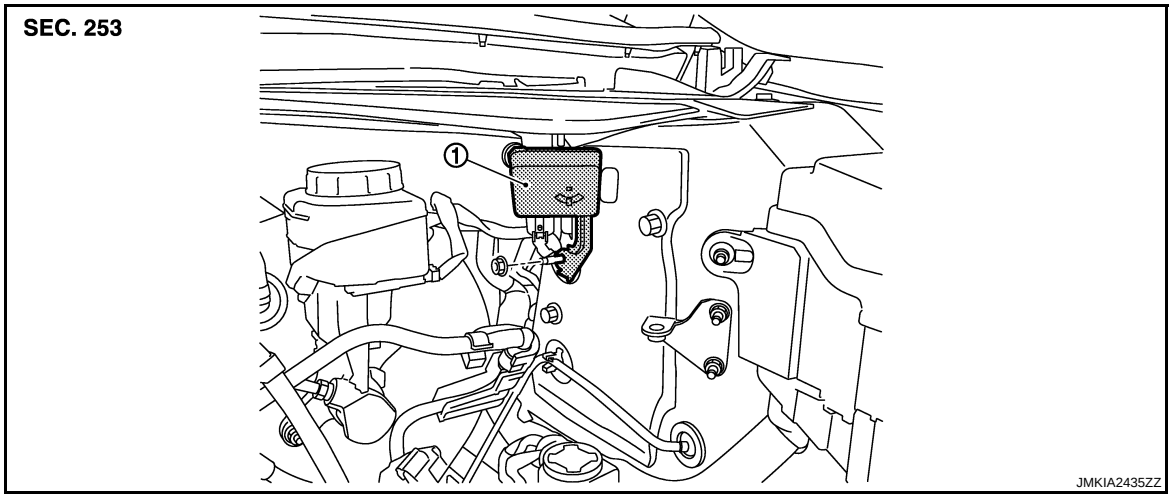

1. Intelligent Key warning buzzer

Removal and Installation

INFOID:0000000003795141

REMOVAL

1. Remove the Intelligent Key warning buzzer mounting nut (A), and then remove the Intelligent Key warning buzzer (1).

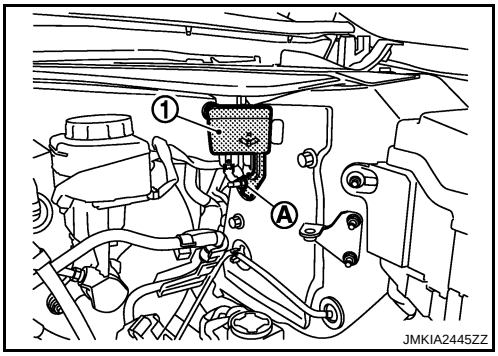

INSTALLATION

Install in the reverse order of removal.

KEY SLOT

Exploded View

INFOID:0000000003795142

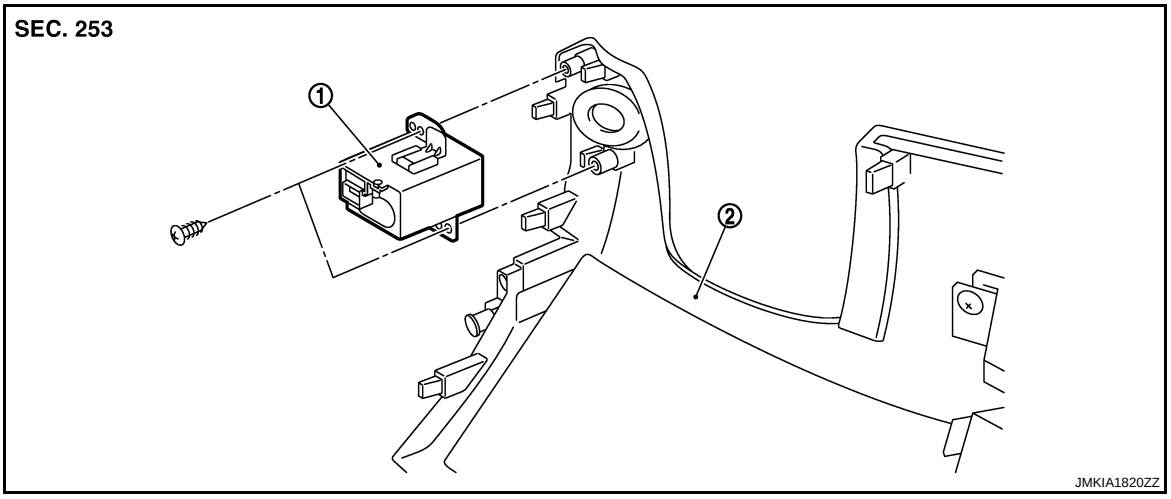

1. Key slot
2. Instrument lower panel

Removal and Installation

INFOID:0000000003795143

REMOVAL

1. Remove the instrument lower panel LH. Refer to IP-12, "Removal and Installation".
2. Disconnect key slot connector.
3. Remove the key slot mounting screws (A), and then remove key slot (1) from instrument lower panel LH.

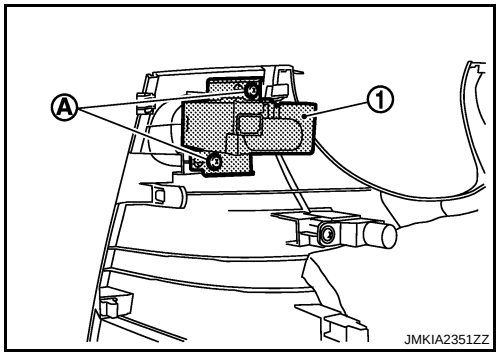

INSTALLATION

Install in the reverse order of removal.

TRUNK LID OPENER REQUEST SWITCH

Exploded View

INFOID:0000000003846685

Refer to EXT-38, "Exploded View".

Removal and Installation

INFOID:0000000003846686

REMOVAL

1. Remove the trunk lid finisher outer. Refer to EXT-38, "Removal and Installation".
2. Remove the trunk lid opener request switch mounting pawl (A), and then remove trunk lid opener request switch (1) from inner bracket.

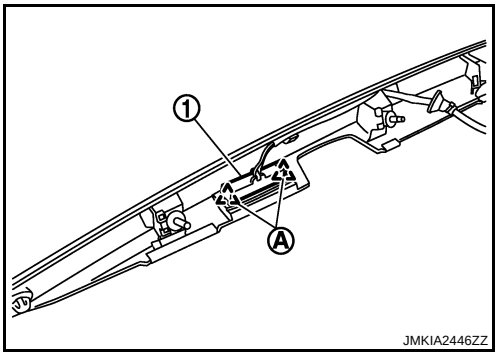

Pawl

INSTALLATION

Install in the reverse order of removal.

TRUNK LID OPENER SWITCH

Exploded View

INFOID:0000000003846687

Refer to EXT-38, "Exploded View".

Removal and Installation

INFOID:0000000003846688

REMOVAL

1. Remove the instrument lower panel. Refer to IP-12, "Removal and Installation".
2. Remove the trunk lid opener switch from instrument driver lower panel, and then remove pawl. Press trunk lid opener switch front side to disengage from instrument driver lower panel.

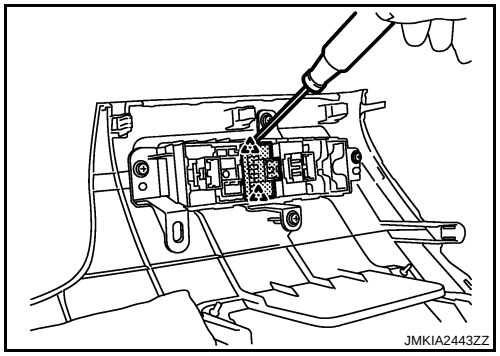

Pawl

INSTALLATION

Install in the reverse order of removal.

REMOTE KEYLESS ENTRY RECEIVER

Exploded View

INFOID:0000000003795146

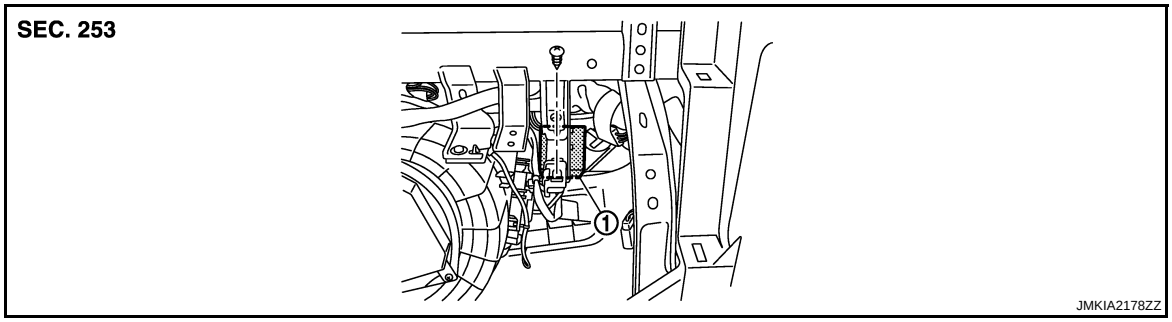

1. Remote keyless entry receiver

Removal and Installation

INFOID:0000000003795147

REMOVAL

1. Remove the instrument lower panel RH. Refer to IP-12, "Removal and Installation".
2. Remove the remote keyless entry receiver mounting screws (A), and then remove remote keyless entry receiver (1).

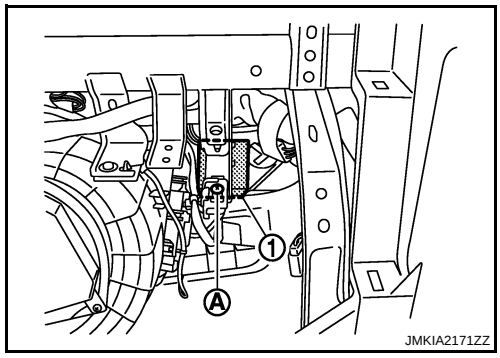

INSTALLATION

Install in the reverse order of removal.

INTELLIGENT KEY BATTERY

Removal and Installation

INFOID:0000000003795148

1. Release the lock knob at the back of the Intelligent Key and remove the mechanical key.

2. Insert a flat-bladed screwdriver (A) wrapped with a cloth into the slit of the corner and twist it to separate the upper part from the lower part.
   CAUTION:
   - **Never touch the circuit board or battery terminal.**
   - **The key fob is water-resistant. However, if it does get wet, immediately wipe it dry.**

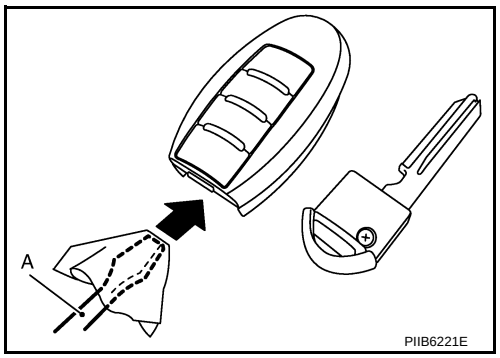

3. Replace the battery with new one.

Battery replacement	**:Coin-type lithium battery (CR2025)**
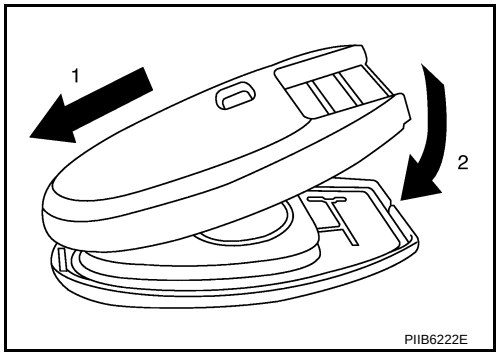
4. Align the tips of the upper and lower parts, and then push them together until it is securely closed.
   CAUTION:
   - **When replacing battery, keep dirt, grease, and other foreign matter off the electrode contact area.**
   - **After replacing the battery, check that all Intelligent Key functions work normally.**